Vermont Residential Building Energy Code

Handbook

DRAFT

A Guide to Complying with
Vermont's Residential Building Energy Standards (30 V.S.A. § 51)

Edition 4.0

Base Code Effective March 1, 2015
Stretch Code Effective December 1, 2015

Energy Code Assistance Center
128 Lakeside Ave., Suite 401
Burlington, VT 05401
855-887-0673 ~ *toll free*
802-658-1643 ~ *fax*

Vermont Department of Public Service
Planning & Energy Resources Division
112 State Street
Montpelier, VT 05620-2601
802-828-2811

This publication was prepared with the support of the U.S. Department of Energy.

Vermont Residential Building Energy Code

Basic Requirements ~ *Summary*

Note: This is an overview of key points. See full text of Appendix C for complete details.

1	**Air Leakage**	Seal all joints, access holes and other such openings in the building envelope, as well as connections between building assemblies. Air barrier installation must follow criteria established in Section C.1a.
2	**Vapor Retarder**	For non-vented framed walls, without exterior continuous insulation, install a vapor retarder (i.e., 6 mil. plastic or vapor-barrier paint) on the warm-in-winter side of the insulation.
3	**Duct Insulation**	In unconditioned spaces, insulate supply and return ducts for heating and cooling systems to the same level as adjacent spaces.
4	**Duct Sealing**	All ducts, air handlers and filter boxes must be sealed and tested according to the standards outlined in Section C.3c unless located within conditioned space. Building framing cavities may not be used as supply ducts.
5	**HVAC Systems: Efficiency & Balancing**	HVAC heating and cooling systems must comply with minimum federal efficiency standards 80% AFUE for residential boilers; 78% AFUE for furnaces). All HVAC systems must provide a means of balancing, such as air dampers, adjustable registers or balancing valves.
6	**Programmable Thermostat**	Where the primary heating system is a forced-air furnace, forced-air split system heat pump, packaged unit heat pump, water boiler, or steam boiler, at least one programmable thermostat per home must be installed.
7	**Solid Fuel-Burning Appliances and Fireplaces**	All solid fuel-burning appliances and fireplaces must have tight-fitting, gasketed metal, glass or ceramic doors with compression closure or compression latch system.
8	**Exhaust Fans**	Exhaust dampers are required for kitchen, bath and dryer fans.
9	**Ventilation & Combustion Air**	All homes must have an automatically controlled ventilation system. Chimney-vented combustion devices must have combustion air. See Chapter 2 for details.
10	**Maximum Fenestration U-Factor**	The area-weighted average maximum fenestration U-factor permitted using trade-offs is 0.32 for windows and 0.55 for skylights.
11	**Electric Systems**	In most cases, each unit of a multi-family dwelling must have a separate electric meter. See Appendix D for exceptions.
12	**Mechanical System Piping Insulation**	Mechanical system piping capable of carrying fluids above 105°F (41°C) or below 55°F (13°C) must be insulated to a minimum of R-3.
13	**Lighting**	A minimum of 75% of the lamps in permanently installed lighting fixtures must be high-efficiency lamps.
14	**Circulating Hot Water Systems**	All circulating service hot water piping must be insulated to at least R-3. Circulating hot water systems must also include an automatic or readily accessible manual switch that can turn off the hot water circulating pump when the system is not in use.
15	**Equipment Sizing**	Heating and cooling equipment must be sized in accordance with ACCA Manual S based on building loads calculated in accordance with ACCA Manual J or other approved heating and cooling calculation methodologies.
16	**Heat Pump Supplementary Heat**	Ductless air-source heat pumps may not have supplementary electric-resistance heat integral to the unit.
17	**Pools, Hot Tubs and Spas**	All swimming pools must have a time clock to control the pump. Heated swimming pools must have both a heater on/off switch in an accessible location and a pool cover. Heaters may not have continuously burning pilot lights.
18	**Certification**	Complete a Vermont Residential Building Energy Standards Certificate for each dwelling. Send one copy to the Vermont Public Service Department and one copy to the town clerk of the town in which the property is located, and affix the original on or near the home's electrical panel or heating equipment.

For details about any of these requirements, see the full text of this appendix.

How to Use This Handbook

This Handbook puts all the information you need to know about Vermont's Energy Code for residential construction into one publication. Each chapter is divided into sections. A reference to "Section 2.3" indicates the third section of Chapter 2. Further divisions of a section are labeled with a letter (e.g., 2.3a, 2.3b, etc.). Tables and figures are numbered chronologically within each chapter. For example, the first table in Chapter 3 is Table 3-1, the second table is Table 3-2, etc.

When to Consult the Handbook

There are four times during the course of home construction to review this Handbook:

1. When making additions, alterations or repairs to existing homes.
2. During the new construction Design Stage: Review the requirements up front. It will be easier and less expensive at this stage to make any modifications needed to ensure compliance.
3. In the Event of new construction Design Changes: Review whether the home still complies when there are changes. This will ensure that there are no surprises upon completion.
4. Upon Completion: State law requires every Vermont builder to self-certify that the home complies with the Code as built, altered or repaired.

What to Read

★ To quickly learn if the home you're building will meet the Code's technical requirements:

✓ Review the **Basic Requirements** on the inside front cover and in Chapter 2,

✓ Follow the **Ventilation and Combustion Safety Requirements** (Chapter 3), and

✓ Read the chapter associated with the compliance method you are choosing. See Chapter 5 for the Prescriptive Method; see Chapter 6 for the REScheck Software Compliance Method; and see Chapter 7 for the Home Energy Rating Compliance Method.

✓ For an overview of the Code, read the following chapters:

✓ **Introduction: The Vermont Residential Building Energy Code** — summarizes the key features of the Code.

✓ **Chapter 1: Rules for Compliance** — explains in detail which buildings must comply and which are exempt.

✓ **Chapter 2: Basic Requirements** — explains in detail the mandatory requirements that all buildings must meet (aside from additional Prescriptive or Performance requirements).

What's New Starting in 2015

1. When making additions, alterations or repairs to existing homes.
2. A new "Existing Homes" chapter (Chapter 4) has been added clarifying requirements for additions, alterations and repairs.
3. Compliance with new Stretch Code required for Act 250 projects, effective December 1, 2015.
4. New insulation and fenestration requirements and prescriptive packages.
5. Log Homes minimum requirements increased in stringency.
6. ASHRAE Standard 62.2 allowed as alternate method to meet ventilation requirements.
7. Makeup air requirements for exhaust hood systems were added.
8. Base Code maximum HERS score is now 60, and Stretch Code is 54.
9. Maximum glazing area of 20% was removed from Prescriptive Packages.
10. Maximum building air leakage reduced to 3 ACH50 (from 5 ACH50).
11. Ductless air-source heat pumps may not have supplementary electric-resistance heat integral to the unit.
12. 75% of lamps in lighting fixtures are required to be high efficacy (increased from 50%).

DRAFT

The Vermont Residential Building Energy Code

✓ **Chapter 3: Ventilation and Combustion Safety Requirements** — discusses the importance of indoor air quality and how to achieve it in energy-efficient construction.

✓ **Chapter 4: Existing Homes** — explains requirements for additions, alterations and repairs.

✓ **Chapter 7: Certification** — specifies how to accurately certify compliance with the Code.

✓ **Read the Appendices**. The Appendices include definitions and clarifications of terms used in this Handbook, default R- and U-values, guidelines for calculations, and Vermont-specific resources for builders.

If You Need Help

The Energy Code Assistance Center provides free technical assistance. Call toll-free: 855-887-0673.

DRAFT

Contents

Introduction: The Vermont Residential Energy Code

What Buildings Must Comply? 1
What Buildings Are Exempt? 1
The Basic Steps for Meeting the Code 2
Compliance Methods 2
Residential Energy Code Updates 3
Technical Assistance 3

Chapter 1: Rules for Compliance

Section 1.1 Builder's Responsibilities 5
Section 1.2 Buildings That Must Comply 5
Section 1.3 Exempt Buildings 6
Section 1.4 Owner/Builder Special Provision 7
Section 1.5 Act 250 Provision 7
Section 1.6 Penalty for Not Complying with the Residential Energy Code 7

Chapter 2: Basic Requirements

Basic Requirements Summary Table *10
Section 2.1: Building Envelope 11
Section 2.2: Materials & Equipment Information 17
Section 2.3: Heating & Cooling 17
Section 2.4: Service (Potable) Water Heating 19
Section 2.5: Electrical 20
Section 2.6: Dampers 21
Section 2.7: Lighting 21

Chapter 3: Ventilation and Combustion Safety Requirements

Section 3.1 Ventilation 23
Section 3.2 Combustion Safety 27

Chapter 4: Existing Homes

Section 4.1 Exceptions 29
Section 4.2 Compliance 30

Chapter 5: The Prescriptive Compliance Method

Section 5.1 When to Use the Prescriptive Method 33
Section 5.2 How to Comply with the Code Using the Prescriptive Method 34
Table 5-1 Prescriptive Prescriptive Table for Single-Family Homes *36
Table 5-2 Prescriptive Prescriptive Table for Log Homes 39

DRAFT

** The Basic Requirements Summary Table is located on the inside front cover as well.*
** Table 5-1 is located on the inside back cover as well.*

DRAFT

Chapter 6: The RES*check* Software Compliance Method
Section 6.1 How the Software Method Works 43
Section 6.2 System Requirements 43
Section 6.3 Using RES*check* Software 44
Section 6.4 How to Obtain RES*check* Software 44

Chapter 7: The Home Energy Rating Compliance Method
Section 7.1 How the Home Energy Rating Method Works 45
Section 7.2 Advantages of the Home Energy Rating Method 46
Section 7.3 Basic Requirements for Home Energy Ratings 46
Section 7.4 The Home Energy Rating 48

Chapter 8: Certification
Section 8.1 Types of Certification 51
Section 8.2 The "Vermont Residential Building Energy Standards Certificate" 51
Completing/Filing the RBES Certificate 53
Section 8.3 The "Vermont Owner/Builder Disclosure Statement" 55
Completing/Filing the Disclosure Statement 55

Appendices

Appendix A: **Definitions** 57

Appendix B: **Default Values** 67
Table B-1: U-values for Windows & Skylights 67
Table B-2: U-values for Doors 67

Appendix C: **Guidelines for Calculations** 69
Sec. C.1: When to Perform Calculations 69
Sec. C.2: How to Define the Building Envelope 69
Sec. C.3: How to Calculate the Glazing Percentage 70
Sec. C.4: Understanding Thermal Values 72
Sec. C.5: How to Calculate Average R-values and U-values 72

Appendix D: **Vermont Resources for Energy Efficiency & Utility Services** 74

Appendix E: **Residential Building Energy Standards Legislation** 76

DRAFT

This chapter summarizes the key features of the Vermont Residential Building Energy Code on March 1.

Introduction

The Vermont Residential Energy Code

The Vermont Residential Energy Code — officially called the "Residential Building Energy Standards" (RBES) and generally referred to as simply the Residential Energy Code — initially was passed by the Vermont legislature in May 1997. It is a minimum standard of energy efficiency that has applied to virtually all new residential construction in Vermont since July 1, 1998 with updates in 2006, 2011 and 2015. The 2015 Vermont Residential Energy Code is based on Vermont amendments to the 2015 International Energy Conservation Code (2015 IECC).

DRAFT

What Buildings Must Comply?

★ Detached one- and two-family dwellings.

★ Multi-family and all other residential dwellings three stories or fewer in height.

★ Additions, alterations, renovations and repairs to existing buildings.

★ Factory-built modular homes not on a permanent chassis.

★ Residential buildings commencing construction on or after March 1, 2015 must comply with this code. Buildings for which construction commenced before March 1, 2015, if not complying with this code must comply with the previous version of RBES.

★ Act 250 projects commencing construction on or after December 1, 2015 must comply with the Stretch Code. Projects for which construction commenced before December 1, 2015, if not complying with this code must comply with the previous version of RBES. If after March 1, 2015, but before December 1, 2015 the new base code would apply.

★ In towns that require a certificate of occupancy, compliance with the Code is required.

This is a summary; see Chapter 1 for details.

After December 1, 2015, Act 250 projects must comply with Vermont's newly-developed Stretch Code (section 407), which requires:

(1) a higher level of thermal energy efficiency than the Base Code minimum, or a lower maximum Energy Rating Index

(2) maximum air leakage rate based on a blower door test

(3) electric vehicle charging for multifamily developments of 10 or more dwelling units.

What Buildings Are Exempt?

★ Commercial and high-rise residential buildings. Residential portions of a mixed use building must meet the *Residential* Energy Code. Residential portions of mixed-use buildings include the living spaces in the building and the nonliving spaces in the building that serve only the residential users such as common hallways, laundry facilities, residential management offices, community rooms, storage rooms, and foyers.

★ Mobile homes on a permanent chassis with (except for site-built components such as conditioned basements or crawl spaces).

★ Buildings or additions with very low energy use (those designed for a peak energy use of less than 3.4 Btu/h [1 Watt] per square foot of floor area).

★ Unconditioned buildings.

★ Hunting camps or summer camps.

The Residential Energy Code is both simple and flexible in the ways a home can meet the technical requirement. There are three methods that can be used to comply. You select the one that works best for your design.

The Basic Steps for Meeting the Code

The Vermont Residential Energy Code encompasses two requirements: a **technical requirement** (i.e., minimum standards for energy-efficient building components and construction practices); and a **certification requirement** for reporting compliance. It is one of the few codes in the country in which the builder *self-certifies* compliance.

The law recognizes that it is the builder's responsibility to understand the Residential Energy Code, to build to the minimum technical efficiency standards, and then to certify (on a one-page form) that the building complies with the law. No plan reviews or final inspections by Code officials are involved.[1] The whole process can be summarized as follows:

1. Determine whether you need to comply (Chapter 1);
2. Follow the minimum ventilation and combustion safety requirements (Chapter 3);
3. Follow the Basic Requirements (Chapter 2);
4. Follow the Existing Homes requirements for additions, alterations and repairs (Chapter4).
5. Select and complete the Compliance Method that works best for you (Chapters 5-7); and
6. Fill out, file and post the required compliance certificate (Chapter 8).

DRAFT

Compliance Methods

The technical requirement of the Residential Energy Code consists of four components:

- ★ **Basic Requirements:** a list of fixed requirements applicable regardless of compliance path selected (see inside front cover).
- ★ **Ventilation & Combustion Safety Requirements:** (see Chapter 3).
- ★ **Existing Homes:** requirements pertaining to additions, alterations and repairs.
- ★ **Prescriptive Requirements:** requirements that vary based on the compliance method selected (Chapter 5).

In order to comply with the Residential Energy Code, a home, *as built*, must meet all of the Basic Requirements, Ventilation & Combustion Safety Requirements, and the Prescriptive Requirements using one of the compliance methods. Additions, alterations and repairs must meet the Existing Homes requirements pertaining to the portion(s) of the home affected.

Three different methods of complying with the Residential Energy Code have been designed. These all prescribe the thermal and efficiency values that are necessary to meet the minimum standards of the Code. These vary in simplicity of use, as well as in the level of efficiency above the minimum standard that must be achieved. In general, the simplest methods specify the highest levels of efficiency, while the more complex methods are closest to the minimum efficiency standard of the Code. The three compliance methods are:

Prescriptive Method	The simplest approach. Allows you to incorporate a prescribed set of features. Minimal calculations. (See Chapter 5.)
RES*check* Software Method	Use your computer with REScheck software to easily analyze almost any design and determine whether any modifications are needed to meet the Code. (See Chapter 6.)
Home Energy Rating Method	This approach gives full credit for air tightness, efficient heating, cooling and domestic water heater, and solar orientation. A certified Energy Rater is required to complete this approach. (See Chapter 7.)

[1] While the Residential Energy Code does not require inspections by code offials, it does not eliminate inspections related to Act 250 projects, spot checks for enforcement of other applicable codes, or inspections required by state or local codes.

Residential Energy Code Updates

The legislation to create the Vermont Residential Energy Code provides for regular review and updates to the provisions in the Code. The review of the Residential Energy Code will be administered by the Vermont Public Service Department. Please address all comments and inquiries to:

Vermont Public Service Department
Planning & Energy Resources Division
112 State Street
Montpelier, Vermont 05620-2601
802-828-2811

Technical Assistance

Technical assistance with the Residential Energy Code is available at no charge. Please contact:

Energy Code Assistance Center
128 Lakeside Ave., Suite 401
Burlington, VT 05401
855-887-0673 ~ *toll free*
802-658-1643 ~ *fax*

The Energy Code Assistance Center (ECAC) services include:

★ Toll-free assistance hotline: 855-887-0673.

★ Workshops for builders on how to comply with the Vermont Residential Energy Code.

★ Handbooks, forms, software and other Code-related materials.

★ Professional advice on how to easily meet the Code.

★ Information about state-of-the-art construction techniques and building details.

★ Referral to energy-efficiency programs.

★ Sources for energy-efficient products.

★ Customized workshops and presentations on energy-efficient building practices.

DRAFT

E-CALL Hotline
855-887-0673

The E-CALL Hotline is staffed from 8 a.m. to 5 p.m. Monday through Friday. A voice mail is available at all other times. Call for free assistance with any Code-related questions or concerns you may have.

Energy Code Assistance Center

This chapter discusses:

★ The builder's responsibilities under the Vermont Residential Energy Code.

★ What the Residential Energy Code does and does not cover.

Chapter 1

Rules for Compliance

DRAFT

Section 1.1

Builder's Responsibilities

Under the Vermont Residential Energy Code, it is your responsibility as a builder to determine *for each residential building project:*

1. Whether the building is required to meet the minimum technical requirements of the Code and
2. Whether a document must be completed and filed in order to meet certification requirements (a document is required unless the building is exempt as specified in Section 1.3).

Section 1.2

Buildings That Must Comply

The following buildings must meet both the technical and the certification requirements of the Vermont Residential Energy Code:

★ **Detached one- and two-family dwellings.**

★ **Multi-family and other residential buildings three stories or fewer in height**.

★ **Additions, alterations, renovations and repairs** (further detail in Chapter 4).

★ **Factory-built modular homes** not subject to Title VI of the National Manufactured Housing Construction & Safety Standards Act of 1974 (i.e., homes not on a permanent chassis).

★ **Site built components** (such as conditioned basements or crawlspaces) of homes not subject to RBES must comply.

Section 1.3

Exempt Buildings

The following buildings are exempt from both the technical and the certification requirements of the 2015 Vermont Residential Energy Code:

★ **Existing buildings** for which construction commenced before March 1, 2015. However, additions, alternations and repairs to existing homes need to meet code requirements, as appropriate. Homes commencing construction before March 1, 2015 must comply with a previous version of RBES.

★ **Act 250 projects** for which construction commenced before December 1, 2015 (however, these homes must comply with the previous version of RBES).

★ **Commercial buildings** or portions classified as commercial or high-rise residential. (A residential portion of a mixed-use building, three stories tall or less, must meet the Residential Energy Code.)

★ **Mobile homes** subject to Title VI of the National Manufactured Housing Construction & Safety Standards Act of 1974 (i.e., single- and double-wide homes on a permanent chassis). Site-built components such as conditioned basements or crawl spaces are not exempt.

★ **Buildings or additions with very low energy use**: Buildings or additions designed for a peak energy use of less than 3.4 Btu/h (1 Watt) per square foot of floor area. (Any occupied building intended to be heated and lived in will not meet this exemption.)

★ **Unconditioned buildings** that are neither heated nor cooled.

★ **Hunting camps and summer camps.**

★ Unaltered portions of the existing building or building system do not need to comply.

DRAFT

Section 1.4

Owner/Builder Special Provision

"Owner/builder" projects are exempt from the technical requirements of the Code, but the owner/builder must meet certification requirements by completing and filing a disclosure statement at the Town Clerk's Office where the home is located. To qualify for this provision, *all* of the following criteria must be met:

1. The property must not be subject to Act 250.
2. The owner must be the person in charge of construction (i.e., the "general contractor"), directing the details of construction and the selection and installation of materials.
3. The owner must live in the building.
4. The owner must evaluate whether the home meets the Residential Energy Code.
5. Depending on whether the home meets the technical requirement of the Code, the owner must complete one of two documents: either the *Vermont Residential Building Energy Standards Certificate* if the home meets the technical requirement, or the *Vermont Owner/Builder Disclosure Statement* if it does not. (See Chapter 8.)
6. Before entering into a binding purchase and sale agreement, the owner must disclose in writing (using the Owner-Builder Disclosure Form or similar) to a prospective buyer the nature and extent of any non-compliance with the Residential Energy Code. This disclosure must itemize measures not meeting the minimum requirements.

Section 1.5

Act 250 Provision

Residential buildings that have an *Act 250 permit dated prior to December 1, 2015*, must meet the version of the Base Code (as well as Ventilation & Combustion Safety Requirements) in place at the time construction commenced. (This provision applies to all of the technical and the certification requirements.)

Section 1.6

Penalty for Not Complying with the Residential Energy Code

If a home required by law to meet the Residential Energy Code does not comply, a homeowner may seek damages in court within six years of occupancy or the filing of the required certification as noted in Section 1.1. (For details on the certification process, see Chapter 8.)

DRAFT

Chapter 2

Basic Requirements

The Residential Energy Code specifies basic minimum requirements that are mandatory for all buildings. This details the basic requirements that are mandatory for all buildings under the Prescriptive or RES*check* software compliance methods.

This chapter does not, however, specify minimum insulation R-values or maximum glazing or door U-values, which are detailed in chapters 5 through 7.

Some but not all of these requirements are mandatory with the Home Energy Rating Method (Chapter 7). Refer to Table 7-1 for a summary of basic requirements that apply to those methods.

Figure 2-1 illustrates several basic requirements. Refer to the *Basic Requirements Summary* on the inside front cover or at the end of this chapter for a concise outline of the requirements discussed in this chapter.

DRAFT

Figure 2-1: Some of the Basic Requirements.

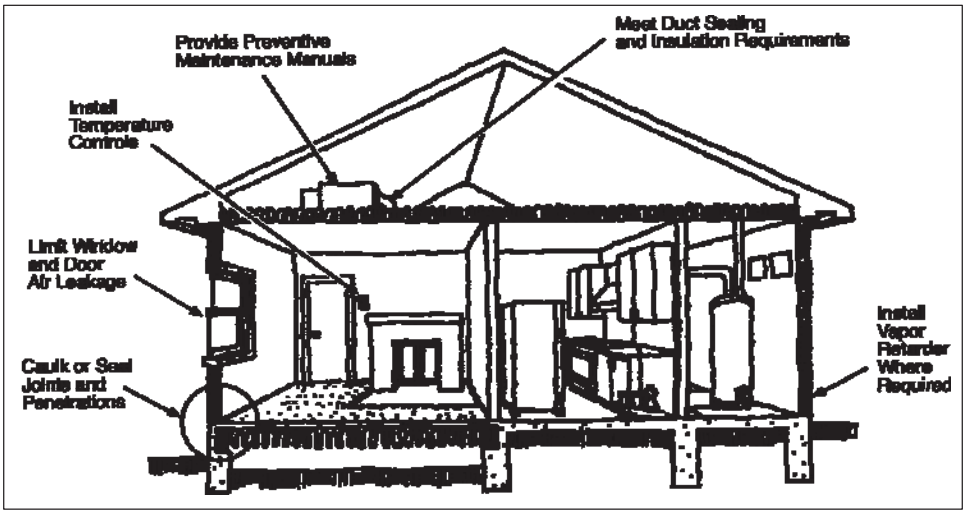

Vermont Residential Building Energy Code

Basic Requirements ~ *Summary*

Note: This is an overview of key points.

1	**Air Leakage**	Seal all joints, access holes and other such openings in the building envelope, as well as connections between building assemblies. Air barrier installation must follow criteria established in Section C.1a.
2	**Vapor Retarder**	For non-vented framed walls, without exterior continuous insulation, install a vapor retarder (i.e., 6 mil. plastic or vapor-barrier paint) on the warm-in-winter side of the insulation.
3	**Duct Insulation**	In unconditioned spaces, insulate supply and return ducts for heating and cooling systems to the same level as adjacent spaces.
4	**Duct Sealing**	All ducts, air handlers and filter boxes must be sealed and tested according to the standards outlined in Section C.3c unless located within conditioned space. Building framing cavities may not be used as supply ducts.
5	**HVAC Systems: Efficiency & Balancing**	HVAC heating and cooling systems must comply with minimum federal efficiency standards 80% AFUE for residential boilers; 78% AFUE for furnaces). All HVAC systems must provide a means of balancing, such as air dampers, adjustable registers or balancing valves.
6	**Programmable Thermostat**	Where the primary heating system is a forced-air furnace, forced-air split system heat pump, packaged unit heat pump, water boiler, or steam boiler, at least one programmable thermostat per home must be installed.
7	**Solid Fuel-Burning Appliances and Fireplaces**	All solid fuel-burning appliances and fireplaces must have tight-fitting, gasketed metal, glass or ceramic doors with compression closure or compression latch system.
8	**Exhaust Fans**	Exhaust dampers are required for kitchen, bath and dryer fans.
9	**Ventilation & Combustion Air**	All homes must have an automatically controlled ventilation system. Chimney-vented combustion devices must have combustion air. See Chapter 2 for details.
10	**Maximum Fenestration U-Factor**	The area-weighted average maximum fenestration U-factor permitted using trade-offs is 0.32 for windows and 0.55 for skylights.
11	**Electric Systems**	In most cases, each unit of a multi-family dwelling must have a separate electric meter. See Appendix D for exceptions.
12	**Mechanical System Piping Insulation**	Mechanical system piping capable of carrying fluids above 105°F (41°C) or below 55°F (13°C) must be insulated to a minimum of R-3.
13	**Lighting**	A minimum of 75% of the lamps in permanently installed lighting fixtures must be high-efficiency lamps.
14	**Circulating Hot Water Systems**	All circulating service hot water piping must be insulated to at least R-3. Circulating hot water systems must also include an automatic or readily accessible manual switch that can turn off the hot water circulating pump when the system is not in use.
15	**Equipment Sizing**	Heating and cooling equipment must be sized in accordance with ACCA Manual S based on building loads calculated in accordance with ACCA Manual J or other approved heating and cooling calculation methodologies.
16	**Heat Pump Supplementary Heat**	Ductless air-source heat pumps may not have supplementary electric-resistance heat integral to the unit.
17	**Pools, Hot Tubs and Spas**	All swimming pools must have a time clock to control the pump. Heated swimming pools must have both a heater on/off switch in an accessible location and a pool cover. Heaters may not have continuously burning pilot lights.
18	**Certification**	Complete a Vermont Residential Building Energy Standards Certificate for each dwelling. Send one copy to the Vermont Public Service Department and one copy to the town clerk of the town in which the property is located, and affix the original on or near the home's electrical panel or heating equipment.

Figure 2-2: Typical openings in the building envelope that should be sealed.

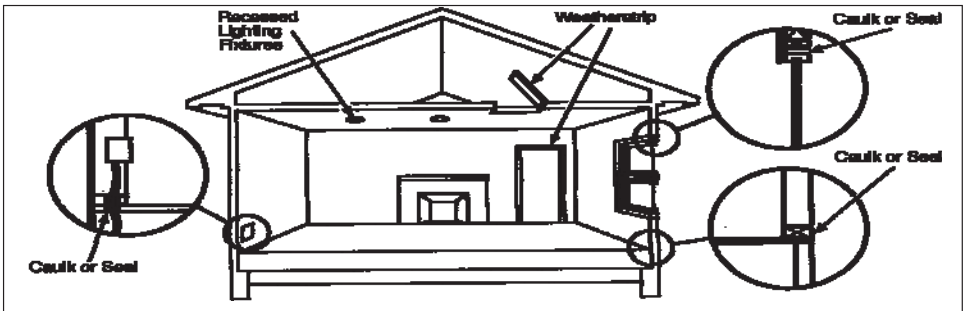

Openings between conditioned and unconditioned space or between conditioned space and the outside.

Section 2.1

Building Envelope

Section 2.1a

Air Leakage

All exterior joints, seams or penetrations in the building envelope that are sources of air leakage must be either sealed with durable caulking materials, closed with gasketing systems, taped, or covered with moisture-vapor-permeable house wrap. Additionally, air sealing must be verified by either a visual inspection or blower door test (see Section 2.1b). Table 2-1 contains the list of items that are required to be visually inspected if the visual inspection option for demonstrating building air tightness is chosen.

DRAFT

Table 2-1

Air Sealing Check List

*If using the visual inspection method to demonstrate building air tightness, each of these items **MUST** be inspected.*

Component	Air Barrier Criteria	Insulation Installation Criteria
General Requirements	A continuous, durable air barrier must be installed in the building envelope. The exterior thermal envelope contains a continuous, durable air barrier. Breaks or joints in the air barrier must be sealed. An air barrier is defined as any durable solid (non-porous) material that completely blocks air flow between conditioned space and unconditioned space, including necessary accessories to provide adequate support to resist positive and negative pressures without displacement or damage. The air barrier should be continuous and be durably connected to all penetrations, windows and other (structural) interruptions. Open-cell or closed-cell foam must have a finished thickness ≥ 5.5 in. or 1.5 in., respectively, to qualify as an air barrier unless the manufacturer indicates otherwise. If flexible air barriers are used, they must be fully sealed at all seams and edges and supported per manufacturer's installation instructions. Flexible air barriers must not be made of kraft paper, or other materials that are easily torn. If polyethylene is used, its thickness must be ≥ 6 mil.	Air-permeable insulation must not be used as a sealing material and must be installed in all vertical walls, sloped ceilings, and floors within the thermal envelope must be enclosed on all six sides and in contact with a durable, air barrier.
Ceiling / attic	The air barrier in any dropped ceiling/soffit must be aligned with the insulation and any gaps in the air barrier must be sealed. Access openings, drop down stairs or knee wall doors to unconditioned attic spaces must be sealed, insulated and gasketed.	The insulation in any dropped ceiling/soffit must be aligned with the air barrier and must be enclosed on five sides and in contact with a durable, interior air barrier. A top-side air barrier is not required in a flat attic.
Walls	The junction of the foundation and sill plate must be sealed. The junction of the top plate and the top of exterior walls must be sealed. Knee walls must be sealed. When part of the thermal envelope, knee wall insulation must be enclosed on all six sides and in contact with a durable, interior air barrier.	Cavities within corners and headers of frame walls must be insulated by completely filling the cavity with a material having a thermal resistance of R-3 per inch minimum. Exterior thermal envelope insulation for framed walls must be installed in substantial contact and continuous alignment with the air barrier. Exterior thermal envelope insulation for framed walls must be enclosed on all six sides and in contact with a durable, air barrier.[a]
Windows, skylights and doors	The space between window/door jambs and framing, and skylights and framing must be sealed with minimally-expanding foam.	
Rim joists	Rim joists must include the air barrier. Junctions of the foundation and sill plate, sill plate and rim-band, and rim band and subfloor must be sealed. When air permeable insulation is installed a durable, interior air barrier must be installed at the rim joist.	Rim joists must be insulated.
Floors (including above garage and cantilevered floors).	The air barrier must be installed at any exposed edge of insulation.	Floor framing cavity insulation must be installed to maintain permanent contact with the underside of subfloor decking, or floor framing cavity insulation must be permitted to be in contact with the top side of sheathing, or continuous insulation installed on the underside of floor framing and extends from the bottom to the top of all perimeter floor framing members.

Component	Air Barrier Criteria	Insulation Installation Criteria
Crawl space walls	Exposed earth in unvented crawl spaces must be covered with a Class I vapor retarder with overlapping joints taped.	Where provided instead of floor insulation, insulation must be permanently attached to the crawlspace walls.
Shafts, penetrations	Duct shafts, utility penetrations, and flue shafts opening to exterior or unconditioned space must be sealed. Doors or hatches in knee walls opening to exterior or unconditioned space must be insulated and gasketed.	
Narrow cavities		Batts in narrow cavities must be cut to fit, or narrow cavities must be filled by insulation that on installation readily conforms to the available cavity space.
Garage separation	Air sealing must be provided between the garage and conditioned spaces.	
Recessed lighting and appliances	Recessed light figures and other appliances (speakers, exhaust fans, light shaft etc.) installed in the building thermal envelope must be IC rated, airtight labeled (or "Washington State Approved") and sealed with a gasket or caulk between the housing and the interior wall or ceiling cover. Fixtures and appliances must maintain required clearances of not less than 1/2" from combustible material and not less than 3" from insulation material, or as required by manufacturer's installation requirements.	Recessed light fixtures installed in the building thermal envelope must be air tight and IC rated.
Plumbing and wiring	All plumbing and wiring penetrations must be sealed to the air barrier.	Insulation must be placed between the exterior of the wall assembly and pipes. Batt insulation must be cut neatly to fit around wiring and plumbing in exterior walls, or insulation that on installation readily conforms to available space must extend behind piping and wiring and must be in full contact with all air barriers.
Shower/tub on exterior wall	Exterior walls adjacent to showers and tubs must have insulation filling any gaps or voids between tub or shower walls and unconditioned space.	Exterior walls adjacent to showers and tubs must have a durable, air barrier separating the exterior wall from the shower and tubs and be insulated.
Electrical/phone box on exterior walls	The air barrier must be installed behind electrical or communication boxes or air-sealed boxes must be installed.	Insulation completely fills voids between the box and exterior sheathing.
Common wall	Whenever continuity of the building thermal envelope is broken at walls separating dwelling units in Group R-2 building, including common, party, and fi e walls, such walls must be insulated to a minimum of R-10 on each side of the break in insulation continuity.	Air barrier must be installed in common wall between dwelling units. Common walls must be sealed at junctions with outside walls and at the top pressure plane of the house.
HVAC register boots	HVAC register boots that penetrate building thermal envelope must be sealed to the subfloor or drywall.	
Concealed sprinklers	When required to be sealed, concealed fi e sprinklers must only be sealed in a manner that is recommended by the manufacturer. Caulking or other adhesive sealants must not be used to fill voids between fi e sprinkler cover plates and walls or ceilings.	
Fireplace	A durable air barrier must be installed in contact with insulation. Fireplace must have compression closure doors and combustion air supplied from the outdoors.	

Section 2.1b

Air Sealing Verification

Building envelope air tightness and insulation installation must be verified through one of the following options:

★ **Visual Inspection Option**

Building envelope tightness and insulation installation will be considered acceptable when the items listed in Section 2.1a are field verified by a party independent from the installer of the insulation and air barrier.

★ **Testing Option**

Tested air leakage must be less than three air changes per hour (ACH) when tested with a blower door at a pressure of 50 pascals (1 psf). Testing must occur after rough in and after installation of penetrations of the building envelope, including penetrations for utilities, plumbing, electrical, ventilation and combustion appliances. The following protocol must be followed in preparing the building envelope for testing:

★ Leave all supply registers and return grills open and uncovered.

★ Leave all bathroom and kitchen fans open (i.e., in their normal operating condition). Only a permanently installed back draft damper in its normal condition may impede the flow of air.

★ Leave any combustion air ducts or louvers to the exterior open. (If a homeowner or builder has sealed them off, open them for the test.)

★ Leave any make-up air ducts with in-line dampers (e.g., for large kitchen exhaust fans or combustion air) as-is (unsealed). Only a permanently installed back draft damper or motorized damper, in its normal condition may impede the flow of air.

★ Leave the dryer vent as-is, whether or not the dryer is in place during the test. Only a permanently installed back draft damper in its normal condition may impede the flow of air.

★ Leave open any outside air duct supplying fresh air for intermittent ventilation systems (including a central-fan-integrated distribution system).

★ Operable crawl-space vents, where present, are to be left in the open position.

★ Open all interior doors within the conditioned space, including doors to conditioned basements. (Closet doors may be left closed unless the closet contains windows or access to the attic or crawl space.)

★ Leave louvered openings of a whole-house fan as is. (If there is a seasonal cover in place during the test, leave it in place.)

★ Close all doors to the exterior or unconditioned spaces; if any door to the exterior or unconditioned space lacks weather-stripping at testing time, it can be temporarily taped off.

★ Close and latch all windows.

★ Close chimney dampers.

★ Either seal or fill with water plumbing drains with p-traps that may be empty.

★ Seal off exterior duct openings to *continuously operating* fresh-air or exhaust-air ventilation systems (preferably at the exterior envelope).

★ Close any adjustable window trickle ventilators and/or adjustable through-the-wall vents.

★ If an evaporative cooler has been supplied with a device used to seal openings to the exterior during the winter, that device should be installed for the test.

DRAFT

Section 2.1c

Vapor Retarders

Class I or II vapor retarders are required on the interior side of frame walls.

Exceptions:

1. Basement walls.
2. Below grade portion of any wall.
3. Construction where moisture or its freezing will not damage the materials

Class III vapor retarders are permitted where any one of the following conditions is met:

1. Vented cladding over fiberboard.
2. Vented cladding over gypsum. Vented cladding shall include minimum clearance airspaces. Other openings with the equivalent vent area are permitted, including: Vinyl lap or horizontal siding applied over a weather-resistive barrier; Brick veneer with a clear airspace; or other approved vented claddings.
3. Insulated sheathing with R-value 7.5 over 2 x 4 wall.
4. Insulated sheathing with R-value 11.25 over 2 x 6 wall. Spray foam with a maximum permeance of 1.5 perms at the installed thickness, applied to the interior cavity side of wood structured panels, fiberboard, insulating sheathing or gypsum is deemed to meet the continuous insulation requirement where the spray form R-value meets or exceeds the specified continuous insulation R-value.

The following is a list of acceptable materials for each class of vapor retarders:

- ★ Class I: Sheet polyethylene, unperforated aluminum foil.
- ★ Class II: Kraft-faced fiberglass batts.
- ★ Class III: Latex or enamel paint.

Section 2.1d

Unvented Attics

Unvented attic assemblies (spaces between the ceiling joists of the top story and the roof rafters) are permitted in one- and two-family homes and multiple single-family dwellings (townhouses) if all the following conditions are met:

1. The unvented attic space is completely contained within the building thermal envelope.
2. No interior vapor retarders (Class I or II) are installed on the ceiling side (attic floor) of the unvented attic assembly.
3. Where wood shingles or shakes are used, a minimum 1/4 inch (6 mm) vented air space separates the shingles or shakes and the roofi g underlayment above the structural sheathing.
4. Any air-impermeable (e.g., spray foam) insulation must be a Class III vapor retarder, or must have a vapor retarder coating, or covering in direct contact with the underside of the insulation.
5. Either Item 5.1, 5.2 or 5.3 must be met, depending on the air permeability of the insulation directly under the structural roof sheathing.
    1. Air-impermeable (e.g., spray foam) insulation only. Insulation must be applied in direct contact with the underside of the structural roof sheathing.
    2. Air-permeable (e.g., fiberglass or cellulose) insulation only. In addition to the air-permeable insulation installed directly below the structural sheathing, rigid board sheet insulation must be installed directly above the structural roof sheathing as specified in Table R402.4.1.1 for condensation control.
    3. Air-impermeable and air-permeable insulation. The air-impermeable (e.g., spray foam) insulation must be applied in direct contact with the underside of the structural

DRAFT

roof sheathing as specified in Table R402.4.1.1 for condensation control. The air-permeable (e.g., fiberglass or cellulose) insulation must be installed directly under the air-impermeable (e.g., spray foam) insulation.

DRAFT

Examples of Unvented Attic Assemblies

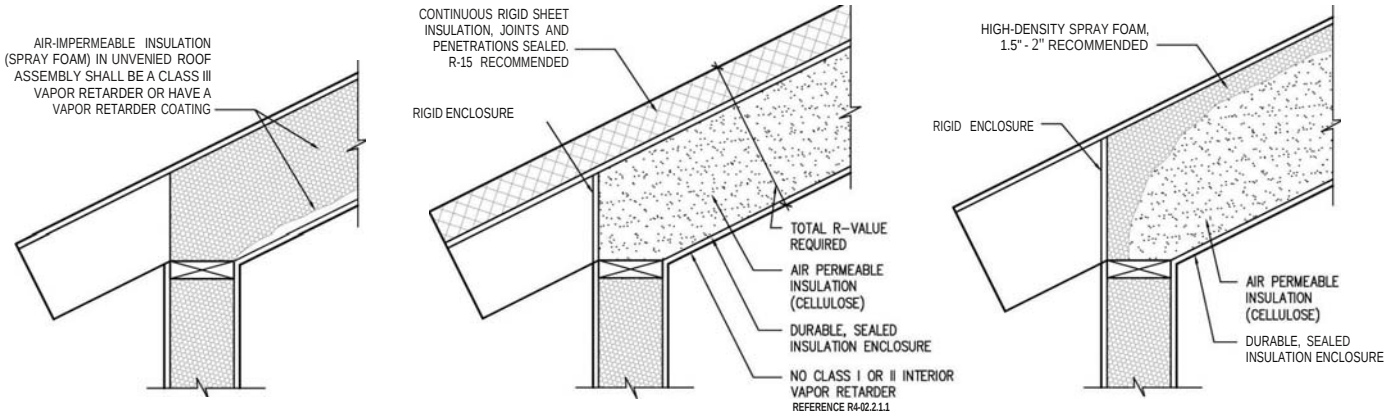

UNVENTED ATTIC ASSEMBLIES

DRAFT

Section 2.2

Materials & Equipment Information

Insulation R-values and glazing and door U-values must be clearly marked on the building plans or specifications. If two or more different insulation levels exist for the same component, record each level separately on the plans or specifications. (For example, if the walls adjacent to the garage have less insulation than the other walls, you must note both insulation levels.) Equipment efficiency make and model number must also be marked on the plans or specifications.

Materials and equipment must be identified so that compliance with the Residential Energy Code can be determined. There are several ways to label materials and equipment to satisfy this requirement.

★ By properly posting the *Vermont Residential Building Energy Standards Certificate* completed for every house. Materials and equipment must be identified on this label, which must then be posted in the residence (e.g., on the main electrical panel, on heating or cooling equipment or nearby in a visible location) to document the energy-efficiency features of the building.

★ By providing labels on all pertinent materials and equipment. For example, the R-value of the insulation is often pre-printed directly on the insulation or can be determined from a striping code. Window U-values are often included on the manufacturer label posted directly on the window.

★ By providing contractor statements certifying the products they have installed. For example, the insulation contractor would certify the R-value of the installed insulation.

For blown or sprayed insulation, the initial installed thickness, the settled thickness, the coverage area, and the number of bags must be clearly posted at the job site, or thickness markers must be placed in attics at least once every 300 square feet.

In addition, manufacturer manuals for all installed heating and cooling equipment and service water heating equipment must be provided.

DRAFT

Section 2.3

Heating and Cooling

Section 2.3a

Equipment Sizing

A heating and cooling (when applicable) design load calculation for the purpose of sizing these systems must be performed. ACCA Manual J or comparable methods are acceptable for determining design loads. Heating and cooling (when applicable) equipment must be sized according to ACCA manual S, and may not be oversized more than indicated in Table 2-2.

Table 2-2

Maximum Equipment Oversizing
ACCA Manual S ~ Heating & Cooling Equipment Sizing Guide

TYPE OF EQUIPMENT	MAXIMUM OVERSIZING
Air conditioners and heat pumps	15%
Fuel-fired heating equipment	40%

Section 2.3b

Duct Insulation

Air distribution systems for heating and cooling located completely within the thermal envelope of the house do not require insulation.

Heating and cooling supply and return ductwork located in unconditioned spaces (such as attics, crawl spaces, unheated basements, garages, and exterior building cavities) must be insulated to the same level as the nearest insulated surface.

Minor changes to the thermal envelope of the home can allow ductwork to remain enclosed within the thermal envelope. For instance, the roof trusses can be constructed with a duct chase incorporated into the truss. This allows a complete thermal envelope with insulation and air barrier to be constructed outside the ductwork, while the interior finish ceiling conceals the ducts.

Advanced design of the duct system can also allow for the ducts to remain within the insulated and conditioned space of the house. Keep the duct system simple and centralized. Heated or cooled air mixes with room air, keeping temperatures even, reducing duct installation costs and eliminating the need for duct insulation.

DRAFT

Section 2.3c

Duct Sealing

Ducts and other system components that convey heated or cooled air must be sealed and tested. Joints and seams must be mechanically supported to prevent separation. Sealant must be long-lasting and appropriate for the duct material. Duct tape is not permitted. Air-impermeable spray foam products may be used without additional joint seals.

Air distribution systems for heating and cooling located completely within the thermal envelope of the house do not require leakage testing.

Heating and cooling ductwork must be tested for leakage in all homes where a part of the duct system is located outside the thermal envelope of the building. Duct leakage testing is performed by pressurizing the duct system with the duct terminations sealed. Complete duct leakage testing methods can be found within ASHRAE Standard 152 or the Mortgage Industry National Home Energy Rating Systems Standard (available through *Residential Energy Services Network*). Ducts are tested at a pressure of 0.1 inches w.g (25 Pa).

Total duct leakage limits are as follows:

★ Rough-in test: The total leakage must be less than or equal to 3 CFM per 100 square feet of conditioned floor area.

★ Postconstruction test: Total leakage must be less than or equal to 4 CFM per 100 square feet of conditioned floor area.

Section 2.3d

Duct Construction

Ductwork must be constructed and erected in accordance with one of the industry standards (e.g., NAIMA, SMACNA, ACCA). Building framing cavities may not be used as ducts or plenums.

Section 2.3e

Balancing

The HVAC system must provide a means for balancing air and water systems. For air systems, this requirement can be met by installing manual dampers at each branch of the ductwork or by installing adjustable registers that can constrict the airflow into a room. For water systems, balancing valves can be installed to control the water flow to rooms or zones.

Section 2.3f

Temperature Controls

The thermostat controlling the primary heating or cooling system of the home must be programmable. The thermostat must initially be programmed by the manufacturer with a heating temperature set point no higher than 70°F and a cooling temperature set point no lower than 78°F. Adjustments to these settings for elderly, disabled or those with special needs is permissible.

Heat pump installations must include a thermostat that can prevent the back-up heat from turning on when the heating requirements can be met by the heat pump alone. A two-stage thermostat that controls the back-up heat on its second stage meets this requirement.

Hot water boilers that supply heat to the building through one- or two-pipe heating systems must have an outdoor set- back control that lowers the boiler water temperature based on the outdoor temperature.

DRAFT

Section 2.3g

HVAC Piping Insulation

All HVAC piping (such as in hydronic heating systems) conveying fluids at temperatures greater than 105 degrees F or chilled fluids at less than 55 degrees F must be insulated to a minimum of R-3. Pipe insulation is not required for piping installed within HVAC equipment.

Section 2.4

Service (Potable) Water Heating

Section 2.4a

Hot Water Circulation and Temperature Maintenance Systems

Circulation Systems. Heated water circulation systems must be provided with a circulation pump. The system return pipe must be a dedicated return pipe or a cold water supply pipe. Gravity and thermo- syphon circulation systems are prohibited. Controls for circulating hot water system pumps must start the pump based on the identification of a demand for hot water within the occupancy. The controls must automatically turn off the pump when the water in the circulation loop is at the desired temperature and when there is no demand for hot water.

Heat trace systems. Controls for electric heat trace systems must automatically adjust the energy input to the heat tracing to maintain the desired water temperature in the piping in accordance with the times when heated water is used in the occupancy.

Demand recirculation systems. A water distribution system having one or more recirculation pumps that pump water from a heated water supply pipe back to the heated water source through a cold water supply pipe must be a demand recirculation water system. Pumps must have controls that comply with both of the following:

1. The control must start the pump upon receiving a signal from the action of a user of a fixture or appliance, sensing the presence of a user of a fixture or sensing the flow of hot or tempered water to a fixture fitting or appliance.
2. The control must limit the temperature of the water entering the cold water piping to 104ºF (40ºC).

DRAFT

Section 2.4b

Swimming Pools, Hot Tubs and Spas

All heated pools, hot tubs, and spas must be equipped with an on/off pool heater switch mounted for easy access (in addition to the circuit breaker for power to the heater). Heaters fired by natural or LP gas cannot have continuously burning pilot lights. Heated pools and hot tubs require a pool cover unless over 70% of the heating energy is from non-depletable sources (such as solar heat).

All swimming pool pumps must be equipped with a time clock that can automatically turn off heaters and pumps according to a preset schedule, except where public health standards require 24-hour operation or where pumps operate solar-and-waste-heat recovery pool heating systems.

Section 2.5

Electrical

In most cases, each individual dwelling unit in a multi-family building must have its own electric meter. ***Exception***: This requirement does not apply to assisted-care facilities, publicly subsidized housing, or housing for the elderly or disabled that does not have electric space heat or electric domestic hot water systems, and where the operator of the institution is paying the electric bills and not charging each resident separate, consumption-based usage charges for electricity.

Electric resistance space heating is prohibited in the City of Burlington.

For Act 250 projects, check the Act 250 permit, as electric resistance space heating may be prohibited.

Section 2.6

Dampers

Exhaust dampers are required for kitchen and bathroom exhaust fans, and for clothes dryers. All solid fuel-burning appliances and fireplaces must have tight-fitting, gasketed doors with compression closure or compression latch system.

Section 2.7

Lighting

A minimum of 75% of the lamps (bulbs) in permanently installed lighting fixtures must be high-efficacy lamps.

High-efficciency bulbs are compact fluorescent lamps, T-8 or smaller diameter linear fluorescent lamps, or lamps with a minimum efficiency of:

1. 60 lumens per watt for lamps over 40 watts;
2. 50 lumens per watt for lamps over 15 watts to 40 watts; and
3. 40 lumens per watt for lamps 15 watts or less.

DRAFT

Chapter 3

Ventilation and Combustion Safety Requirements

DRAFT

Section 3.1

Ventilation

The Vermont Residential Building Energy Code requires all newly constructed homes to be mechanically ventilated. There also are requirements for combustion equipment aimed at reducing the likelihood of flue gas venting problems. This chapter provides details on both of these requirements. Compliance with the ventilation and combustion safety standards of this Code can be met by either following all of the requirements below or by demonstrating compliance with ASHRAE Standard 62.2-2013 (Ventilation and Acceptable Indoor Air Quality in Low-Rise Residential Buildings).

Section 3.1a

Whole House Ventilation

Every new home must have a system consisting of fans, controls and ducts that provides the fresh air for the dwelling unit. The whole-house ventilation system must meet the requirements listed in this chapter and be installed according to the manufacturer's instructions. It must be capable of supplying the specified amount of air during all periods of occupancy automatically, without the need for anyone to turn it on or off.

Pressure Effects

When a fan blows air in or out of a space, it changes the air pressure in the space. Exhaust fans diminish the pressure in the space, or "depressurize" it. Depressurization tends to draw in outside air, garage air and soil gas, and it can interfere with chimneys. Positive pressure, created when a fan blows air into a space, tends to push indoor air out and can cause condensation problems in cold weather. The amount of pressure generated depends on the amount of air being moved and the air tightness of the space.

For best performance, both positive and negative pressures from fans should be minimized. The most critical effect to avoid is substantial depressurization in rooms with chimneys.

Local Exhaust
Bathrooms, kitchens, and laundry rooms are places where pollutants are generated in high concentration. When these areas are being used, an exhaust fan should be active to exhaust pollutants directly to the outdoors before they can negatively impact air quality elsewhere in the home. Typically, this is done with individual, surface-mounted, bathroom exhaust fans and a kitchen range hood.

Whole House Ventilation
Alternatively, ventilation can be done with a remotely-mounted fan or heat recovery ventilator pulling from multiple locations at once.

Section 3.1b

Local Ventilation

All bathrooms containing a bathtub, shower, spa or similar bathing fixture must have an exhaust fan with a minimum capacity of 50 cubic feet per minute (CFM) for intermittent fans, or 20 CFM for continuously operated fans. If the whole-house ventilation system does not provide this, a separate fan with the specified capacity must be installed.

Section 3.1c

Whole House Ventilation System Types

There are two types of whole house ventilation systems allowed by RBES.

★ **Exhaust-only systems** remove stale, indoor air using single or multiple fans. Incoming air is provided by installed inlet ports or by typical leaks in the building shell. These systems tend to depressurize the building.

★ **Balanced systems** use fans to move air in both directions at once. Most of these systems use a heat exchanger to transfer some of the heat from one air stream to another. These systems usually are called heat recovery ventilators (HRVs), energy recovery ventilators (ERVs), or air-to-air heat exchangers. When correctly installed, balanced systems do not significantly affect the air pressure in the house.

All ventilation systems must have a provision for circulating air to all finished living spaces, such as distribution ducts, grilles, transoms or door undercuts. If door undercuts are used, they must be at least one-half inch above the finished floor surface.

Section 3.1d

Fan Requirements

Fans installed as part of a whole-house ventilation system must meet the following requirements. (Fans installed as local exhaust do not need to meet these requirements.)

★ ***Durability***: Fans must be rated for "continuous duty."

★ ***Efficiency:*** Single-port fans (those with only one connection to the conditioned space) must not exceed 50 watts as listed by the manufacturer. This refers to fan power only; it does not include power used for lights, heaters, nightlights, timers, etc. This power limit does not apply to multi-port fans that have more than one connection to the living space.

★ ***Sound:*** Whole-house ventilation equipment located less than 4 feet from louvers, grilles or openings must have a sound rating no greater than 1.5 sones.

What's a Sone?

A sone is a measure of loudness. One sone has been described as being like a quiet refrigerator. Sound volume is important in ventilation systems because most people will disable a fan they find annoying. Ceiling-mounted exhaust fans range from about 1/2 sone to five sones or more.

Fans meeting the EPA ENERGY STAR® standard for household ventilation equipment are considered to meet the three requirements above.

DRAFT

Section 3.1e

Capacity

Whole-house ventilation systems that are not tested must have a rated capacity (at 0.1 inch wg), meeting the minimum rated flow rates listed in Table 3.1.

Alternatively, flow rates can be tested on site, using approved methods (i.e., a flow hood or a calibrated orifice combined with a digital manometer). If the system is tested, it does not need to meet the capacity requirements of Table 3.1, but it must provide a minimum of 15 cubic feet per minute (CFM) plus 15 CFM for each bedroom.

Table 3.1

Capacity Requirements for Whole-House Ventilation Systems

# Bedrooms	*Minimum Rated Capacity (CFM[1])*	*Minimum # of Fans*
1	50	1
2	75	1
3	100	1
4	125	All other systems—2 or more, or Centrally ducted systems—1
5	150	All other systems—2 or more, or Centrally ducted systems—1
Homes over 3000 sq. ft.	0.05 x sq. ft. of conditioned space	All other systems --2 or more, or Centrally ducted systems --1

[1]*CFM = cubic feet per minute*

Section 3.1f

Controls

The whole-house ventilation system must have an automatic control or be capable of being set remotely for continuous operation.

Intermittently operated systems must have an automatic control capable of operating the system without the need for occupant intervention, such as a time switch. Twist or crank-style timers or switches controlled solely by a humidity sensor (humidistat, or dehumidistat) are not acceptable as controls for the whole-house system.

Continuously operated systems must have a remotely mounted (i.e, not in the living space) on/off switch that is appropriately labeled.

DRAFT

Section 3.1g

Installation

All ventilation equipment (both whole-house and local) must be installed according to the manufacturer's instructions and in accordance with the following requirements:

★ Fan housings for ceiling- or wall-mounted fans must be sealed to the ceiling or wall.

★ Inlet grilles for ducted systems must be sealed to the ceiling or wall.

★ Ducts that run more than 8 feet must be a smooth wall (not corrugated or flexible material). All ducts in unheated locations must be insulated.

★ Mechanical fasteners — not tape — must be used to connect the ducts to the fan.

★ Joints and connections must be securely fastened and air-sealed with durable and appropriate materials. Standard duct tape is not allowed for sealing ducts.

★ Noise reduction of remote whole-house fans must be provided by isolating the fan from the hard ducting using at least 1 foot, but no more than 2 feet, of insulated, flexible ducting. (This requirement does not apply to fans mounted in ceilings or walls.) The fan also must be acoustically isolated from the framing of the building.

★ Intake openings, if used, must be located a minimum of 10 feet from any hazardous or noxious contaminant, such as vents, chimneys, fuel fills, streets, alleys, parking lots and loading docks. The bottom of the intake opening(s) must be at least 1 foot above the expected snow accumulation level.

★ Outside openings for both supply and exhaust must be protected with screens, louvers or grilles having a minimum opening size of ¼ inch and a maximum opening size of ½ inch.

DRAFT

Section 3.1h

Clothes Dryers

All clothes dryers must be exhausted to outdoors, according to the manufacturer's instructions (except clothes dryers designed by the manufacturer to be unvented and to not contribute to the interior moisture load, such as condensing dryers and heat pump dryers). Dryer exhaust systems must be independent of all other systems and must transport the dryer exhaust all the way to the outdoors (not to the attic or other space).

Section 3.1i

Exhaust Hoods

Mechanical exhaust hood systems capable of exhausting in excess of 400 CFM must be provided with makeup air at a rate approximately equal to the exhaust air rate. The makeup air systems must also be equipped with a means of closure and be automatically controlled to start and operate simultaneously with the mechanical exhaust system.

Section 3.2

Combustion Safety

The Residential Energy Code requires the installation of appropriate combustion equipment in order to reduce the likelihood of venting problems. Primarily, it requires that air for combustion be provided for chimney-vented devices.

Additions, Alterations, Renovations and Repairs

Combustion safety requirements must be met when heating or cooling equipment is replaced or when alterations will likely change the air leakage characteristics of the home. Examples of alterations that could change the air leakage characteristics of a building are:

★ Replacement of windows.
★ Replacement of insulation in more than half of the wall area.
★ Sealing significant air leakage holes in any part of the building.
★ Adding or removing ductwork.
★ Sealing a fireplace.
★ Adding insulated sheathing at the time of siding replacement.
★ Insulating any formerly uninsulated parts of the building.

Worst-Case CAZ Depressurization
The worst-case depressurization test is configured by determining the largest combustion appliance zone depressurization due to the combined effects of door position, exhaust appliance operation, and air handler fan operation. A base pressure must be measured with all fans off and doors open. The worst-case depressurization is the pressure difference between worst case and the base pressure.

Section 3.2a

Oil and Gas Appliances

Unvented fuel-fired heaters, including room heaters and unvented fireplaces are prohibited.

The Code requires all new homes containing chimney-vented combustion devices to be provided with combustion and dilution air as required by the gas and oil codes (National Fire Protection Association [NFPA] Standard 54 [for gas] and Standard 31 [for oil].) Although these entire codes may not be in effect in certain areas of Vermont, the requirements for combustion and dilution air have been incorporated into the Code and therefore apply regardless of whether a particular locality has adopted the oil and gas codes.

The Code specifically states that all new homes built in accordance with the Code meet the definition of "unusually tight construction" as defined in the oil and gas codes. This means that combustion and dilution air may not be taken from the living space, and that the combustion and dilution air must be provided regardless of the volume of the space.

Additionally, in most cases, **the Code prohibits taking that air from garages, attics or crawl spaces**. Although NFPA 54 and 31 both allow combustion air to be taken from bordering spaces, this is specifically prohibited in Vermont. In general, combustion and dilution air must be taken from outdoors.

Exception: If all the combustion devices in the home are either direct-vent appliances (also called sealed combustion; whereby all air for combustion is supplied directly from outdoors and all flue gases are discharged directly to outdoors) or mechanical draft appliances (where a fan is used to remove flue gases), the combustion and dilution air requirements for oil and gas appliances do not apply.

DRAFT

Section 3.2b

Solid-Fuel Appliances

Solid-fuel (i.e., wood and coal) appliances must have tight-fitting, gasketed metal, glass or ceramic doors with compression closure or compression latch system. Any home certified to have passed the Building Performance Institute (BPI) Combustion Safety Test Procedures is not required to have tight-fitting doors.

In most cases, solid-fuel appliances must have ducted combustion air from outdoors. This exterior air intake:

★ Must not be located within the garage, attic or basement.

★ Must not be located higher than the firebox. Where a woodstove or fireplace is installed below grade (in a basement), the combustion air intake on the home's exterior may be located above the firebox provided that the combustion air supply to the firebox drops below the firebox adjacent to the solid fuel burning system and the combustion air intake on the home's exterior is greater than 15 feet below the top of the chimney for the wood stove, solid-fuel boiler or furnance, or fireplace.

★ The exterior air intake must deliver combustion air to the firebox. For older woodstoves and cookstoves where direct connection of combustion air is not possible, combustion air may be delivered within 24 inches of the stove's air intake opening.

★ Must be screened with ¼ inch mesh.

★ Can be in the sides or back of the firebox, or within 24 inches of the firebox opening on or near the floor.

★ Must be closable and designed to prevent combustible material from dropping into concealed combustible spaces.

★ Must be constructed of noncombustible, corrosion-resistant material, with a minimum 1-inch clearance to combustibles for all parts of the duct within 5 feet of the firebox.

★ Must be a minimum of 6 square inches and not more than 55 square inches.

★ Exterior air inlet shall be installed so as to remain free of obstruction from snow.

Exception: Factory-built fireplaces, masonry fireplaces, and solid-fuel-burning appliances that list exterior air supply ducts as optional or required for proper installation are permitted to be installed with those exterior air supply ducts according to the manufacturer's installation instructions.

Section 3.2c

Spillage Testing

All combustion equipment that is not power-vented or direct-vented (wherein combustion air is drawn directly from the outdoors), shall establish complete draft without spillage under "worst-case" conditions within two minutes. This requirement must be met in new homes and in existing homes after code applicable renovations, alterations or repairs to the building envelope, mechanical equipment, combustion vent system or ductwork. Worst-case spillage must be tested at the draft diverter with a mirror or smoke test in accordance with current Building Performance Institute (BPI) Combustion Safety Test Procedures (http://www.bpi.org/documents/Gold_Sheet.pdf) or an equivalent procedure that accounts for in-home mechanical depressurization.

DRAFT

Chapter 4

Existing Homes

DRAFT

Additions, alterations and repairs to existing homes, conducted after March 1, 2015, must comply with the requirements in Chapter 4. The following are circumstances where existing homes must comply with the Code.

★ **Additions:** Any extension or increase in the conditioned space floor area or height of a building or structure.

★ **Alterations:** Any construction, retrofit or renovation to an existing structure other than repair or addition. Also, a change in a building, electrical, gas, mechanical or plumbing system that involves an extension, addition or change to the arrangement, type or purpose of the original installation.

★ **Repairs:** The reconstruction or renewal of any part of an existing building for the purpose of its maintenance or to correct damage.

★ **Changes in Space Conditioning:** Any nonconditioned or low-energy space that is altered to become conditioned space.

★ **Changes in Use:** Spaces undergoing a change in use that would result in an increase in demand for either fossil fuel or electrical energy.

* Major renovations to homes under an Act 250 permit may trigger an Act 250 permit amendment request would needs to follow Stretch Code requirements after December 1, 2015.

* Historic Buildings: Construction, repair, alteration, restoration and movement structures, and change of occupancy related to a historic building need to comply unless a report has been submitted to the State Historic Preservation Office and has been signed by the owner or registered design professional demonstrating that compliance with a particular provision would threaten, degrade or destroy the historic form, fabric or function of the building.

Section 4.1

Exceptions

The following building conditions do not have to comply with any of the Code requirements:

1. Unaltered portions of the existing building or building supply system
2. Storm windows installed over existing fenestration.
3. Connections or repairs to, or maintenance of existing mechanical systems do not constitute an alteration to that system.

4. Where ducts from an existing heating and cooling system are extended to an addition, duct systems with less than 40 linear feet in unconditioned spaces are not required to be tested.

5. Glass-only replacements in an existing sash and frame.

6. Existing ceiling, wall or floor cavities exposed during construction, provided that these cavities are filled with insulation.

7. Construction where the existing roof, wall or floor cavity is not exposed.

If either the sheathing or insulation is exposed, then the cavity needs to be filled with insulation; this does not require building the roof up.

8. Reroofing projects where neither the sheathing nor the insulation is exposed. Roofs without insulation in the cavity and where the sheathing or insulation is exposed during reroofing must be insulated either above or below the sheathing.

9. Alterations that replace less than 50% of the permanent light fixtures in the space where the alteration is taking place, provided that such alterations do not increase the installed interior lighting power.

10. Alterations or repairs that replace only the bulb and ballast within the existing light fixtures in a space provided that the alteration does not increase the installed interior lighting power.

DRAFT

Section 4.2

Compliance

Portions of the building that are altered must be brought into full compliance with the code that relates to that portion of the building with above exceptions. An addition shall be deemed to comply with this code where the addition alone complies, where the existing building and addition comply with this code as a single building. Alterations and repairs shall be such that the existing building or structure is no less conforming to the provisions of this code than the existing building or structure was prior to the alteration.

Compliance can be achieved through any of the compliance paths, which include the following approaches: prescriptive packages (see Table 4-1), REScheck software (see Chapter 6), or a Home Energy Rating System (HERS) rating (see Chapter 7). For renovations, remodeling, or additions, a Home Energy Rating can be used to demonstrate compliance by rating the entire building, including the new and remodeled portions. Rating the entire building requires including both the existing and new sections of the building, to meet either the maximum HERS of 60 for base code or 54 for stretch code.

Table 4-1

Prescriptive Requirements -
Existing Homes - Additions, Alterations and Repairs

Component	Requirement
1. Ceiling R-Value	R-49
2. Above-Grade Wall R-Value	R-13+10
3. Floor R-Value	R-30
4. Basement/Crawl Space Wall R-Value	R-15/20
5. Slab Edge R-Value	R-15, 4ft
6. Heated Slab R-Value (Edge and Under)	R-15
7. Window and Door U-Value	0.32
8. Skylight U-Value	0.55
9. Maximum Air Leakage	Complete Air Sealing Checklist
10. Maximum Duct Leakage	CFM25/100 CFA

Thermal Values: Use the nominal thermal values listed by the manufacturer. If the home's design specifies a component that has two different thermal values (i.e., R-38 ceiling and R-49 ceiling), an average R-value must be calculated for comparison. (See Section 3.5a).

Wall R-Values: "13+10" means R-13 cavity insulation plus R-10 insulated sheathing. R-25 can be met through any combination of cavity and continuous insulation. If structural sheathing covers 40% or less of the exterior, the continuous insulation R-value can be reduced by up to R-3 to maintain a consistent total sheathing thickness on areas of the walls covered by structural sheathing. If structural sheathing covers more than 40% of exterior, structural sheathing shall be supplemented with insulated sheathing of at least R-2.

Window U-Values: Window U-value is the average U-value for all glazing, including windows, and sliding and patio doors. Replacement windows must have an average U-value of 0.32. (See Section 3.5b to calculate average U-values).

Basement/Crawl Space R-Values: "15/20" means R-15 continuous insulated sheathing on the interior or exterior of the home or R-20 cavity insulation at the interior of the basement wall. "15/20" is allowed to be met with R-13 cavity insulation on the interior of the basement wall plus R-5 continuous insulated sheathing on the interior or exterior of the home. Crawl space wall insulation must cover the full height of the wall and extend to a depth 12 inches below grade and basement wall insulation must cover the full height of the basement wall.

Hatches: Access hatches and doors must be insulated to the same level as the surrounding surface. Vertical doors that provide access to attic spaces must meet the window and door requirements from Table 5-1.

Unconditioned Spaces: Components that enclose unconditioned spaces do not need to be considered.

Window and Door Exemptions: You can exclude up to 15 square feet of glazed fenestration area from the calculation of average U-value for windows, and one door (up to 24 square feet) from the calculation of average U-value for doors.

Default Thermal Values: See Appendix B. Flat and sloped ceiling R-values assume standard truss. However, if a raised truss is used, the requirement for R-49 may be reduced to R-38 and the requirement for R-60 may be reduced to R-49. See Figure B-1 (Appendix B).

Ceilings Without Attics: For ceilings without attic spaces (vaulted ceilings), R-30 is allowed for up to 500 square feet or 20% of the total insulated ceiling area, whichever is less.

Ceilings With Attics: For ceilings with attic spaces, R-38 is allowed to satisfy the requirement for R-49 wherever the full height of uncompressed R-38 insulation extends over the wall top plate at the eaves.

Floors: Floors must be insulated to R-30 or to a level sufficient to fill the framing cavity.

Slab Edge Insulation: Thermal values in this table require the following configurations: slab edge insulation must extend 4 feet or a combination of depth and width that equals 4 feet. Exemption: Up to 8 lineal feet of exposed slab edge may be insulated to R-10.

Heated Slabs: In addition to R-15 slab edge insulation, R-15 insulation is required beneath the entire slab for radiant or directly heated slabs.

Thermal Values That Do Not Apply: Ignore the values in the table if the building component is not part of the home.

Sunrooms: All sunrooms must meet the basic requirements and the Prescriptive requirements outlined above. For sunrooms with thermal isolation, the minimum ceiling insulation R-values must be R-30; the minimum wall R-value must be R-13; and the maximum fenestration U-factor must be 0.45.

Eave Baffle: Eave baffles must be installed over soffit and eave vents where air-permeable insulation is used in vented attics.

Unvented Attics: Unvented attics must meet the requirements of Section C.1d.

DRAFT

The Prescriptive method is the easiest way to ensure compliance with the Residential Energy Code. This chapter reviews:

★ Homes eligible for the Prescriptive Method.

★ When and how to use the Prescriptive Method.

After December 1, 2015, Act 250 projects must comply with Vermont's newly-developed Stretch Code (section 407), which requires:

(1) a higher level of thermal energy efficiency than the Base Code minimum, or a lower maximum Energy Rating Index

(2) maximum air leakage rate based on a blower door test

(3) electric vehicle charging for multifamily developments of 10 or more dwelling units.

Chapter 5

The Prescriptive Compliance Method

DRAFT

The Prescriptive Method is a simple way to compare your home's thermal and efficiency values to values that meet the Residential Energy Code. There are three components to the Residential Energy Code's technical requirement that must be evaluated for each home: the ***Basic Requirements*** (see inside front cover); the ***Ventilation and Combustion Safety Requirements*** (see Chapter 2); and the ***Prescriptive Requirements*** (see tables in this chapter). Your home meets the Residential Energy Code if the thermal and efficiency values for your home meet or exceed the values for both the *Basic* and the *Prescriptive Requirements* and the requirements for Ventilation & Combustion Safety.

There Are Three Components to the Technical Requirement of the Residential Energy Code

In order to meet the technical requirement of the Residential Energy Code, a home must meet or exceed all aspects of:

★ **The Basic Requirements:** a list of fixed requirements (see inside front cover);

★ **The Ventilation and Combustion Safety Requirements,** as outlined in Chapter 2; and

★ **The Prescriptive Requirements:** requirements that vary based on the compliance method selected.

Section 5.1

When to Use the Prescriptive Method

The Prescriptive method is for homes whose thermal and heating efficiency values ("Prescriptive Requirements") match or exceed those of a predefined package in the Prescriptive Requirements Table for your house type. (Tables begin on page 24.) It can be used for all types of homes *except* homes using metal framing for exterior walls; see RES*check* Software Method (Chapter 6) or Home Energy Rating Method (Chapter 7).

If the values for your home do not meet the values specified in one of the five Prescriptive packages and you do not want to change your design, you can choose another compliance method, such as the RES*check* Software Method (Chapter 6) or the Home Energy Rating Method (Chapter 7).

Section 5.2

How to Comply with the Code Using the Prescriptive Method

Take the following steps during the design stage, whenever there are design changes, and upon construction completion:

1. **Review the Basic Requirements** summarized on the inside front cover (or refer to Chapter 2 for detailed explanations). *Your project must meet all 18 Basic Requirements.*

2. **Follow the Ventilation and Combustion Safety Requirements**. (See Chapter 3.)

3. **Identify the nominal R- and U-values** for the building components for your home using manufacturers' product information. Identify your thermal/efficiency values for every component listed in the Prescriptive Table. If a single building component in your home has two or more different thermal values (i.e., R-38 ceiling and R-49 ceiling), calculate the average R- or U-value. (See Appendix C if you need help.)

4. **Select the appropriate Prescriptive Requirements Table** for your project (see sidebar below). Review the five packages listed and choose the package with thermal values closest to those of your home. *Be sure to read the "Table Qualifiers" below the table and verify that your design complies with these conditions.*

5. **Compare the thermal and efficiency values for your home to the package you select**. Keep in mind that:

   ★ The **R-values** for your home must be *equal to or* ***greater*** than the selected package.

   ★ The **U-values** for your home must be *equal to or* ***less*** than the selected package.

   ★ All requirements in footnotes must be met.

6. **If your home meets or exceeds the requirements** for one of the predefined packages (and also meets the Basic Requirements), the home complies with the Code's technical requirement, and you can proceed to step 8.

   If your home does *not* meet the requirements for one of the predefined packages in the Prescriptive Table, consider whether it is feasible to make a design change, or consider another compliance method (Chapters 6 and 7).

Selecting the Correct Prescriptive Table for the Prescriptive Method

To determine the minimal Prescriptive Requirements, determine which house type applies to your project and use the corresponding table:

★ **Single-family and multi-family homes**: Detached one- or two-family residential buildings. (Duplexes are considered single-family homes for the purposes of the Code.) *See Table 5-1.*

★ **Log homes:** Homes with an assembly of individual structural logs for use as an exterior or interior load bearing wall, shear wall, or non-load bearing wall. See Table 5.2. Note on adding insulation to log walls: Insulation may be applied to the interior or exterior log surface to increase wall U-Factor when the weather side is constructed in compliance with IRC-2012 Section 703 Exterior Covering.

DRAFT

7. **Upon completion of construction, self-certify your compliance** with the Residential Energy Code by filing a *Vermont Residential Building Energy Standards Certificate*. The certificate is your statement that your home meets or exceeds the requirements of the Residential Energy Code. The process:

   a. Complete the certificate when the home is *100% finished*. See Chapter 7 for detailed instructions.

   b. Within 30 days, send one copy each to:

      ★ *The town clerk* for the town or city in which the home is located. (Note: Check local procedures before filing the certificate; local fees and forms may be required.)

      ★ *The Vermont Public Service Department*
      Planning & Energy Resource Division
      112 State Street
      Montpelier, VT 05620-2601

   If the home is participating in a utility "new construction" program, check with the utility; you may need to provide a copy in order to receive an efficiency incentive or rebate.

   Be sure to keep one copy for your records as well.

8. **Post the original certificate in the home**, affixing the label on or near the electrical service panel or heating equipment.

When to Evaluate Using the Prescriptive Method

To ensure Code compliance, compare the appropriate Prescriptive Prescriptive Table with your home:

1. During the design stage.
2. Whenever there are design changes.
3. Upon completion.

DRAFT

☞ Prescriptive Tables begin on the next page.

Select the appropriate table
(Table 5.1 for the base code; Table 5.2 for log homes and Table 5.3 for the Stretch Code)
for your project.

Table5-1

Prescriptive Requirements

Base Code ~ *Single-Family and Multi-Family Homes*

Component	*Package 1*	*Package 2*	*Package 3*	*Package 4*	*Package 5*
1. Ceiling R-Value	R-49	R-49	**R-28 cont.**	**R-60 attic/ R-49 slope**	**R-49**
2. Above-Grade Wall R-value	R-13+10	**R-25**	**R-21 cont.**	**R-20 ~~cav.~~**	**R-13+10**
3. Floor R-value	R-30	R-30	R-30	R-30	R-30
4. Basement/Crawl Space Wall R-value	R-15/20	R-15/20	R-15/20	R-15/20	R-15/20
5. Slab Edge R-value	R-15, 4ft.	R-15, 4ft.	R-15, 4ft	R-15, 4 ft	**R-10, 4 ft**
6. Heated Slab R-value (Edge and Under)	R-15	R-15	R-15	R-15	R-15
7. Window and Door U-value	0.32	**0.28**	0.32	**0.28**	**0.28**
8. Skylight U-value	0.55	0.55	0.55	0.55	0.55
9. Maximum Air Leakage	Complete Air Sealing Checklist				
10. Maximum Duct Leakage	4 CFM25/ 100 CFA	4 CFM25/ 100 CFA	4 CFM25/ 100 CFA	4 CFM25/ 100 CFA	4 CFM25/ 100 CFA

Note: R-values must be *equal to or greater* than the values shown. U-values must be *equal to or less* than the values shown.

Table Qualifiers

A **Thermal Values:** Use the nominal thermal values listed by the manufacturer. If the home's design specifies a component that has two different thermal values (i.e., R-38 ceiling and R-49 ceiling), an average R-value must be calculated for comparison. (See Section 3.5a.)

B **Wall R-Values:** "13+10" means R-13 cavity insulation plus R-10 insulated sheathing. R-25 can be met through any combination of cavity and continuous insulation. If structural sheathing covers 40% or less of the exterior, the continuous insulation R-value can be reduced by up to R-3 to maintain a consistent total sheathing thickness on areas of the walls covered by structural sheathing. If structural sheathing covers more than 40% of exterior, structural sheathing shall be supplemented with insulated sheathing of at least R-2.

C **Window U-Values:** Window U-value is the average U-value for all glazing, including windows, and sliding and patio doors. Replacement windows must have an average U-value of 0.32. (See Section 3.5b to calculate average U-values.)

D **Window and Door Exemptions:** You can exclude up to 15 square feet of glazed fenestration area from the calculation of average U-value for windows, and one door (up to 24 square feet) from the calculation of average U-value for doors.

E **Default Thermal Values:** See Appendix B. Flat and sloped ceiling R-values assume standard truss. However, if a raised truss is used, the requirement for R-49 may be reduced to R-38 and the requirement for R-60 may be reduced to R-49. See Figure B-1 (Appendix B).

F **Ceilings Without Attics:** For ceilings without attic spaces (vaulted ceilings), R-30 is allowed for up to 500 square feet or 20% of the total insulated ceiling area, whichever is less.

G **Ceilings With Attics:** For ceilings with attic spaces, R-38 is allowed to satisfy the requirement for R-49 wherever the full height of uncompressed R-38 insulation extends over the wall top plate at the eaves.

H **Slab Edge Insulation:** Thermal values in this table require the following configurations: slab edge insulation must extend 4 feet or a combination of depth and width that equals 4 feet. Exemption: Up to 8 lineal feet of exposed slab edge may be insulated to R-10.

I **Basement/Crawl Space R-Values:** "15/20" means R-15 continuous insulated sheathing on the interior or exterior of the home or R-20 cavity insulation at the interior of the basement wall. "15/20" is allowed to be met with R-13 cavity insulation on the interior of the basement wall plus R-5 continuous insulated sheathing on the interior or exterior of the home. Crawl space wall insulation must cover the full height of the wall and extend to a depth 12 inches below grade and basement wall insulation must cover the full height of the basement wall.

J **Hatches:** Access hatches and doors must be insulated to the same level as the surrounding surface. Vertical doors that provide access to attic spaces must meet the window and door requirements from Table 5-1.

K **Unconditioned Spaces:** Components that enclose unconditioned spaces do not need to be considered.

L **Heated Slabs:** In addition to R-15 slab edge insulation, R-15 insulation is required beneath the entire slab for radiant or directly heated slabs.

M **Thermal Values That Do Not Apply:** Ignore the values in the table if the building component is not part of the home.

N **Sunrooms:** All sunrooms must meet the basic requirements and the Prescriptive requirements outlined above. For sunrooms with *thermal isolation*, the minimum ceiling insulation R-values must be R-30; the minimum wall R-value must be R-13; and the maximum fenestration U-factor must be 0.45.

O **Eave Baffle:** Eave baffles must be installed over soffit and eave vents where air-permeable insulation is used in vented attics.

P **Unvented Attics:** Unvented attics must meet the requirements of Section C.1d

Q **Floors:** Floors must be insulated to R-30 or to a level sufficient to fill the framing cavity.

Examples of Prescriptive Above Grade Wall Assemblies

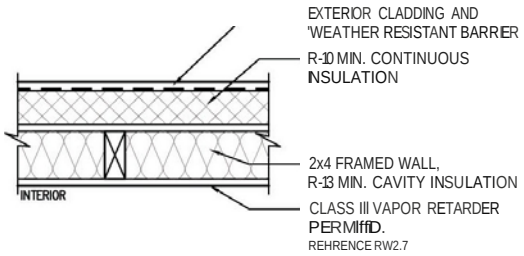

R-13+10 ABOVE GRADE WALL

BASE CODE, PACKAGE 1 & 5
STRETCH CODE, PACKAGE 1

NOTE:
1. EXTERIOR THERMAL ENVELOPE SHALL CONTAIN A CONTINUOUS, DURABLE AIR BARRIER PER R402.4. ALL BREAKS OR JOINTS IN AIR BARRIER SHALL BE SEALED AND ALLOW FOR DIFFERENTIAL MOVEMENT BETWE:EN MATER IALS.

2. CLASS I OR II VAPOR RETARDERS ARE REQUIRED ON THE INTERIOR SIDE OF FRAMED WALLS PER R402.6. CLASS III VAPOR RETARDERS SHALL BE PERMIffiD PER R402.7.

DRAFT

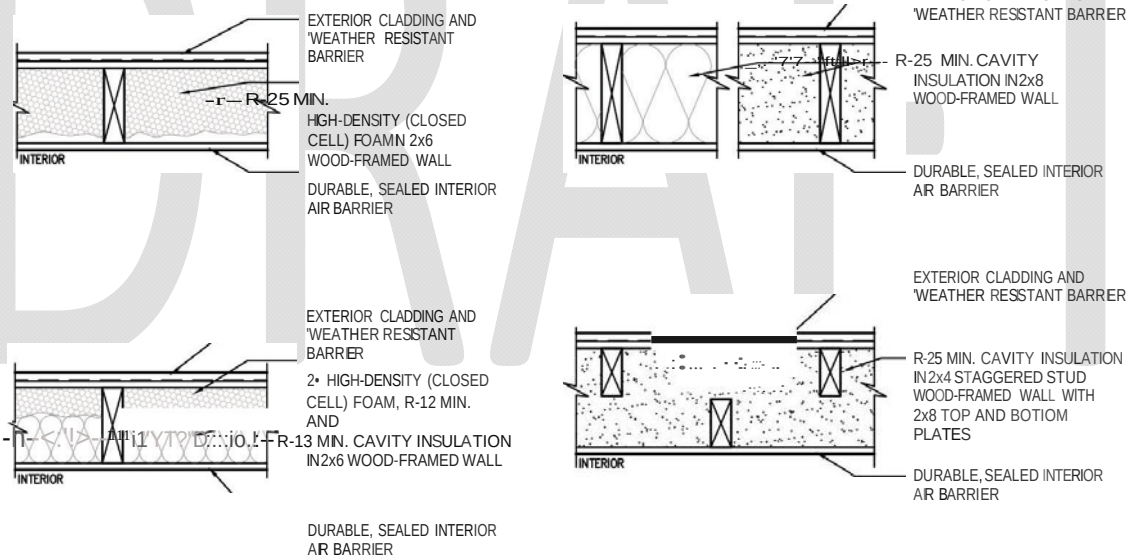

R-25 ASSEMBLIES. ABOVE GRADE WALLS

BASE CODE, PACKAGE 2
STRETCH CODE, PACKAGE 2

Examples of Prescriptive Slab Edge Insulation Requirements

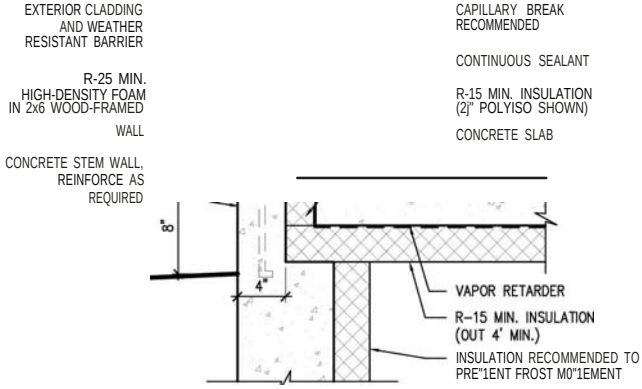

SLAB EDGE DETAIL
2x6 ABOVE GRADE WALL

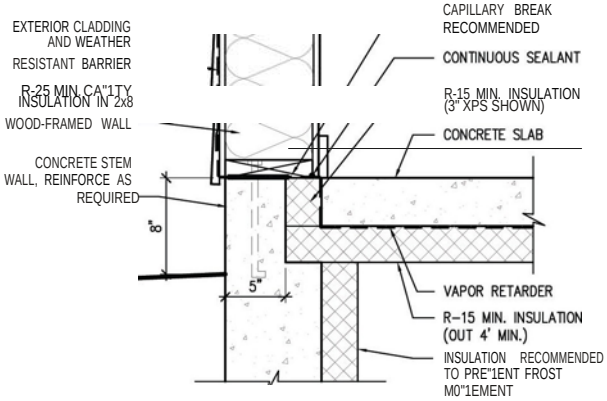

SLAB EDGE DETAIL
2x8 ABOVE GRADE WALL

DRAFT

Table

Prescriptive Requirements

Log Homes ~ *Prescriptive Method*

Component	*Package 1*
1. Ceiling R-Value	R-49
2. Above-Grade Wall U-value	Log
3. Floor R-value	R-38
4. Basement/Crawl Space Wall R-value	R-15
5. Slab Edge R-value	R-15, 4 ft
6. Heated Slab R-value (Edge and Under)	R-15
7. Maximum Glazing U-Factor	20%
8. Window and Door U-value	0.30
9. Skylight U-value	0.55
10. Heating System AFUE	90% gas/LP, 85% oil
11. Maximum Air Leakage	Complete Air Sealing Checklist
12. Maximum Duct Leakage	4 CFM25/100 CFA

Note: R-values must be *equal to or greater* than the values shown. U-values must be *equal to or less* than the values shown.

These guidelines apply to all "Prescriptive Requirements" tables in this Handbook.

A **Thermal Values:** Insulation should be added to the outside of log walls, not inside, where appropriate. Use the nominal thermal values listed by the manufacturer. If the home's design specifies a component that has two different thermal values (i.e., U-0.026 ceiling and U-0.02 ceiling), an average U-value must be calculated for comparison. (See Section 3.5a.)

B **Log Walls:** Log walls must comply with ICC400 with an average minimum wall thickness of 5 inches or greater. Non-log exterior walls shall be insulated in accordance with Table 5-1.

C **Window U-Value:** Window U-value is the average U-value for all glazing, including windows, skylights and sliding patio doors. Replacement windows must have an average U-value of 0.32. (See Section 3.5b to calculate average U-values.)

D **Window and Door Exemptions:** You can exclude up to 15 square feet of glazed fenestration area from the calculation of average U-value for windows, and one door (up to 24 square feet) from the calculation of average U-value for doors.

E **Unconditioned Spaces:** Components that enclose unconditioned spaces do not need to be considered.

F **Ceilings Without Attics:** For ceilings without attic spaces (vaulted ceilings), U-0.033 is allowed for up to 500 square feet or 20% of the total insulated ceiling area, whichever is less.

G **Slab Edge Insulation:** Thermal values in this table require the following configurations: slab edge insulation must extend 4 feet or a combination of depth and width that equals 4 feet.

H **Hatches:** Access hatches and doors must be insulated to the same level as the surrounding surface.

I **Heating System Efficiency:** Gas heating systems must have a minimum AFUE of 90% and oil systems must have a minimum of 85%. Boilers must have an outdoor temperature reset or thermal purge control.

J **Heated Slabs:** In addition to U-0.066 slab edge insulation, a U-value of 0.066 is required beneath the entire slab for radiant or directly heated slabs.

K **Thermal Values That Do Not Apply:** Ignore the values in the table if the building component is not part of the home (i.e., if there are no sloped ceilings, ignore the values).

L **Sunrooms:** All sunrooms must meet the basic requirements and the Prescriptive requirements outlined above, except the maximum glazing requirement. For sunrooms with *thermal isolation*, the minimum ceiling insulation R-values must be R-30; the minimum wall R-value must be R-13; and the maximum fenestration U-factor must be 0.45

M **Unvented Attics:** Unvented attics must meet the requirements of Section C.1d

N **Maximum Glazing Area:** Glazing area includes window and skylight opening area, plus actual glazed area of glass in doors, as a percentage of wall area. Sunrooms are exempt from this requirement. See Section C.8.

O **Basement Walls:** Basement walls shall be R-15 continuous insulation or R-20 cavity full basement height.

Table5-3

Prescriptive Requirements

Stretch Code ~ *Single-Family and Multi-Family Homes*

Component	*Package 1*	*Package 2*	*Package 3*	*Package 4*	*Package 5*
1. Ceiling R-Value	R-60 attic/ R-49 slope	R-49 attic/ R-49 slope	**R-60 attic/ R-49 slope**	**R-28 cont.**	**R-60 attic/ R-49 slope**
2. Above-Grade Wall R-value	R-13+10	**R-25 cav.**	**R-20 cav.**	**R-21 cont.**	**R-20+11.25**
3. Floor R-value	R-30	R-38	R-38	R-30	R-30
4. Basement/Crawl Space Wall R-value	R-20 cont./ R-13+10	R-20 cont./ R-13+10	R-20 cont./ R-13+10	R-20 cont./ R-13+10	R-15 cont./ R-20 cav.
5. Slab Edge R-value	R-15, 4ft.	R-15, 4ft.	R-15, 4ft	R-15, 4 ft	**R-15, 4 ft**
6. Heated Slab R-value (Edge and Under)	R-15	R-15	R-15	R-15	R-15
7. Window and Door U-value	U-0.28	**U-0.28**	U-0.28	**U-0.30**	U-0.30
8. Skylight U-value	0.55	0.55	0.55	0.55	0.55
9. Maximum Air Leakage	Complete Air Sealing Checklist				
10. Maximum Duct Leakage	4 CFM25/ 100 CFA	Inside thermal boundary	Inside thermal boundary	Inside thermal boundary	Inside thermal boundary

Table Qualifiers

A **Thermal Values:** Use the nominal thermal values listed by the manufacturer. If the home's design specifies a component that has two different thermal values (i.e., R-38 ceiling and R-49 ceiling), an average R-value must be calculated for comparison. (See Section 3.5a.)

B **Wall R-Values:** "13+10" means R-13 cavity insulation plus R-10 insulated sheathing. R-25 can be met through any combination of cavity and continuous insulation. If structural sheathing covers 40% or less of the exterior, the continuous insulation R-value can be reduced by up to R-3 to maintain a consistent total sheathing thickness on areas of the walls covered by structural sheathing. If structural sheathing covers more than 40% of exterior, structural sheathing shall be supplemented with insulated sheathing of at least R-2.

C **Window U-Values:** Window U-value is the average U-value for all glazing, including windows, and sliding and patio doors. Replacement windows must have an average U-value of 0.32. (See Section 3.5b to calculate average U-values.)

D **Window and Door Exemptions:** You can exclude up to 15 square feet of glazed fenestration area from the calculation of average U-value for windows, and one door (up to 24 square feet) from the calculation of average U-value for doors.

E **Default Thermal Values:** See Appendix B. Flat and sloped ceiling R-values assume standard truss. However, if a raised truss is used, the requirement for R-49 may be reduced to R-38 and the requirement for R-60 may be reduced to R-49. See Figure B-1 (Appendix B).

F **Ceilings Without Attics:** For ceilings without attic spaces (vaulted ceilings), R-30 is allowed for up to 500 square feet or 20% of the total insulated ceiling area, whichever is less.

G **Ceilings With Attics:** For ceilings with attic spaces, R-38 is allowed to satisfy the requirement for R-49 wherever the full height of uncompressed R-38 insulation extends over the wall top plate at the eaves.

H **Slab Edge Insulation:** Thermal values in this table require the following configurations: slab edge insulation must extend 4 feet or a combination of depth and width that equals 4 feet. Exemption: Up to 8 lineal feet of exposed slab edge may be insulated to R-10.

I **Basement/Crawl Space R-Values:** "15/20" means R-15 continuous insulated sheathing on the interior or exterior of the home or R-20 cavity insulation at the interior of the basement wall. "15/20" is allowed to be met with R-13 cavity insulation on the interior of the basement wall plus R-5 continuous insulated sheathing on the interior or exterior of the home. Crawl space wall insulation must cover the full height of the wall and extend to a depth 12 inches below grade and basement wall insulation must cover the full height of the basement wall.

J **Hatches:** Access hatches and doors must be insulated to the same level as the surrounding surface. Vertical doors that provide access to attic spaces must meet the window and door requirements from Table5-1.

K **Unconditioned Spaces:** Components that enclose unconditioned spaces do not need to be considered.

L **Heated Slabs:** In addition to R-15 slab edge insulation, R-15 insulation is required beneath the entire slab for radiant or directly heated slabs.

M **Thermal Values That Do Not Apply:** Ignore the values in the table if the building component is not part of the home.

N **Sunrooms:** All sunrooms must meet the basic requirements and the Prescriptive requirements outlined above. For sunrooms with *thermal isolation*, the minimum ceiling insulation R-values must be R-30; the minimum wall R-value must be R-13; and the maximum fenestration U-factor must be 0.45.

O **Eave Baffle:** Eave baffles must be installed over soffit and eave vents where air-permeable insulation is used in vented attics.

P **Unvented Attics:** Unvented attics must meet the requirements of Section C.1d

Q **Floors:** Floors must be insulated to R-30 or to a level sufficient to fill the framing cavity.

Examples of Prescriptive Slab Edge Insulation Requirements

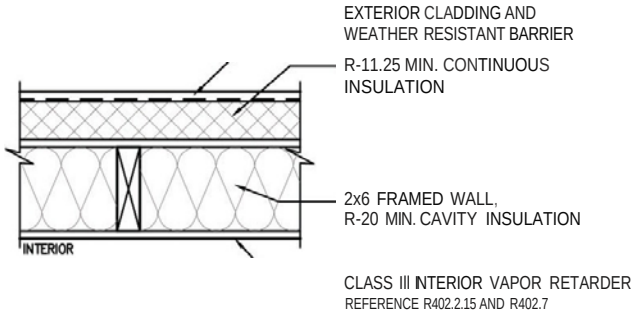

R-20+11 25 ABOVE GRADE WALL

STRETCH CODE, PACKAGE 5

DRAFT

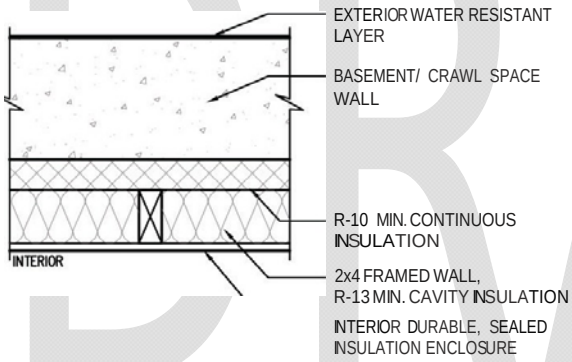

R-13+10
BASEMENT/ CRAWL SPACE WALL

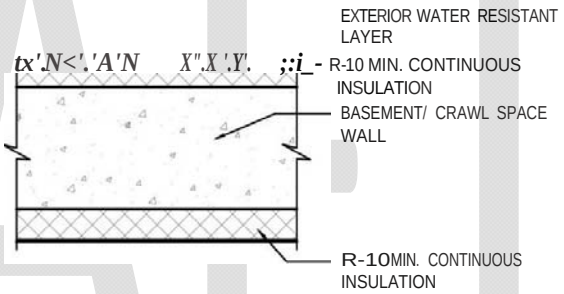

R-20 CONTINUOUS
BASEMENT/ CRAWL SPACE WALL

This chapter explains:
- ★ How the Software Method works.
- ★ The advantages of this method.
- ★ System requirements.
- ★ How to obtain the software.

Chapter 6

The RES*check* Software Compliance Method

DRAFT

The Software Compliance Method involves the use of RES*check* software to determine a home's compliance with the Residential Energy Code. This customized approach accommodates varied building techniques — including 24″ stud spacing, stress-skin panels and metal framing — and offers greater flexibility in meeting the Code's Prescriptive Requirements than the Prescriptive method. You enter data on the home's thermal and efficiency values, and the program determines if the home "passes." If the home passes and meets all of the Basic Requirements (see inside front cover), the home complies with the Residential Energy Code.

Section 6.1

How the Software Method Works

Using RES*check* software, you simply specify component types (for example, 16″-o.c. wood-frame walls), their area and their R- or U-values. There is no need to calculate average R- and U-values; you just enter the value of each component separately, and the software performs the calculations.

Unlike the Prescriptive method, there are no "exempt" door or window areas; you enter data on each part of the thermal envelope, including all access hatches. The software performs all the calculations and determines if your home complies with the Residential Energy Code.

RES*check* enables you to quickly compare different insulation levels in different parts of your building to arrive at a package that works best for you. A report can be printed for use in the field as a final-inspection checklist as well as for your files.

System Requirements
The current version of RES*check* software requires Windows 2000 or later.

Section 6.2

System Requirements

The current version of RES*check* requires Windows 2000 or later. If you are using an older version, contact the Energy Code Assistance Center to request a copy of RES*check* Version 2. The Mac version of REScheck has been discontinued. Mac users are advised to use REScheck-Web at: https://energycode.pnl.gov/REScheckWeb

In order to comply with the Residential Energy Code using this method, a home must:

1) meet all of the Basic Requirements (noted on inside front cover),
2) follow the Ventilation and Combustion Safety Requirements (see Chapter 3), and
3) pass the RES*check* compliance test.

Section 6.3

Using RES*check* Software

At the design stage, whenever the design changes during construction, and again upon completion of construction for verification:

1. **Review the Basic Requirements** summarized on the inside front cover (or refer to Appendix C for detailed specifications). *Your project must meet all 18 Basic Requirements.*
2. **Follow the Ventilation and Combustion Safety Requirements** (Chapter 3).
3. **Calculate the square footage of the building components** (windows, walls, ceilings, etc). If you have components with different insulation values (for example, two flat ceilings with different R-values), calculate the square feet of each one separately. All parts of the thermal envelope must be included. Refer to the software manual or help function for details.
4. **Enter the basic project information** using RES*check* software. Enter building component data, choosing from the available descriptions and keying in areas (square footage), R-values and U-values. See the software manual or help function for complete instructions.
5. The software continuously displays "passes" or "fails." **If your building doesn't pass at first, make changes in building components until it does.** (For example, to determine whether more efficient windows will bring the home into compliance, simply change the window U-value; the result displays almost instantaneously.) Contact the Energy Code Assistance Center at 855-887-0673 for any assistance you may need.
6. **Upon completion of construction, self-certify your compliance** with the Residential Energy Code by filing a *Vermont Residential Building Energy Standards Certificate.* The Certificate is your documentation that the home meets or exceeds the requirements of the Residential Energy Code. The process:
   a. Complete the certificate when the home is *100% finished*. (See Chapter 8 for detailed instructions.)
   b. Within 30 days, send one copy each to:
      - ★ *The town clerk* for the town or city in which the home is located. (Note: Check local procedures before filing the certificate; local fees and forms may be required.)
      - ★ *The Vermont Public Service Department*
        Planning & Energy Resources Division
        112 State Street
        Montpelier, VT 05620-2601

   Be sure to keep one copy of the certificate for your records as well.
7. **Post the original certificate in the home**, affixing the label on or near the electrical service panel or heating equipment.

Section 6.4

How to Obtain RES*check* Software

The RES*check* software can be downloaded at:

http://www.energycodes.gov/rescheck/download.stm

DRAFT

This chapter explains:

★ How home energy ratings can be used to demonstrate Code compliance.

★ The advantages of the Home Energy Rating method of compliance.

DRAFT

Chapter 7

The Home Energy Rating Compliance Method

Section 7.1

How the Home Energy Rating Method Works

In order to comply with the Residential Energy Code using this method, a home must meet all of the Basic Requirements for Home Energy Ratings (Table 7-1), the Ventilation & Combustion Safety Requirements and meet the specific Home Energy Rating Index scores listed later in this chapter.

The Home Energy Rating method is an additional, "professional services" compliance method that a builder may wish to consider in order to demonstrate compliance with the Code. This method is fundamentally different from the other two compliance methods (Prescriptive and RES*check* software) because it requires sophisticated energy-modeling tools to demonstrate that a new home meets or exceeds the technical requirement of the Code. It utilizes a home energy rating, which is an independent, detailed analysis of the home's energy efficiency. This method also has the ability to model complex buildings or buildings with unusual features, such as high glazing percentages.

Home Energy Ratings offer the added benefit of having a professional review your project. Currently Efficiency Vermont offer Home Energy Rating services at no charge for homes that participate in their residential new construction program.

Section 7.2

Advantages of the Home Energy Rating Method

★ *Ventilation System Testing:* A professional energy specialist may test exhaust fan performance to determine compliance with the Code ventilation requirements.

★ *No math:* A professional energy specialist performs the calculations and completes the *Vermont Residential Building Energy Standards Certificate.*

★ *Credit for airtightness and solar gain:* Most of the compliance methods make an assumption about how much air the house leaks, and the Code does not allow builders to "earn credit" for building a tighter house unless the house is tested. Because the rating process includes the test, the calculations can incorporate the results. Likewise, solar gain is factored into the process, so buildings with significant solar gain can take credit for being partially heated by the sun.

★ *Credit for efficient domestic hot water (DHW) systems, including solar-heated systems:* Th other compliance methods assume minimum efficiency DHW. Energy ratings are able to account for increased DHW efficiency.

★ *Credit for electrically efficient lighting and appliances:* Your contractor should be able to provide up-to-date energy ratings for appliances and lighting, which can be incorporated into the design to help ensure the home's compliance with the Code.

DRAFT

Section 7.3

Basic Requirements for Home Energy Ratings

The Basic Requirements for Home Energy Ratings are different than the Basic Requirements for other compliance methods because this method can model all aspects of the building. The only prescribed features are those not considered in building modeling, those required by the law that created the Vermont Residential Energy Code, and those mandated by the Ventilation and Combustion Safety Requirements (Chapter 3). The basic requirements are listed in Table 7-1.

Table 7-1

Basic Requirements for Home Energy Ratings

1	**Vapor Retarder**	For non-vented framed ceilings, wall and floors, install a vapor retarder (i.e., 6 mil. plastic or vapor-barrier paint) on the warm-in-winter side of the insulation.
2	**Pools, Hot Tubs, & Spas**	All swimming pools must have a time clock to control the pump. Heated swimming pools must have both a heater on/off switch in an accessible location and a pool cover. Heaters may not have continuously burning pilot lights.
3	**Solid Fuel-Burning Appliances & Fireplaces**	All solid fuel-burning appliances and fireplaces must have tight-fitting, gasketed metal, glass or ceramic doors with compression closure or compression latch system.
4	**Exhaust Fans**	Exhaust dampers are required for kitchen, bath and dryer fans.
5	**Air Sealing**	The air barrier installation must follow criteria described in appendix C, section 1b.
6	**Maximum Fenestration U-Factor**	The area-weighted average maximum fenestration U-factor permitted using trade-offs is 0.32 for windows and 0.55 for skylights.
7	**Electric Systems**	In most cases, each unit of a multi-family dwelling must have a separate electric meter. See Appendix D for exceptions.
8	**Programmable Thermostat**	Where the primary heating system is a forced-air furnace, forced-air split system heat pump, packaged unit heat pump, water boiler or steam boiler, at least one programmable thermostat per home must be installed.
9	**Duct Sealing**	All ducts, air handlers, filter boxes must be sealed and tested according to the standards outlined in Section C.3c unless located within conditioned space. Building framing cavities may not be used as supply ducts.
10	**Mechanical System Piping Insulation**	Mechanical system piping capable of carrying fluids above 105°F (41°C) or below 55°F (13°C) must be insulated to a minimum of R-3.
11	**Circulating Hot Water Systems**	All circulating service hot water piping must be insulated to at least R-3. Circulating hot water systems must also include an automatic or readily accessible manual switch that can turn off the hot water circulating pump when the system is not in use.
12	**Equipment Sizing**	Heating and cooling equipment must be sized in accordance with ACCA Manual S based on building loads calculated in accordance with ACCA Manual J or other approved heating and cooling calculation methodologies.
13	**Snow Melt System Controls**	Snow and ice-melting systems must include automatic controls capable of shutting off the system when the pavement temperature is above 50°F and no precipitation is falling; and an automatic or manual control that will allow shutoff when the outdoor temperature is above 40°F.
14	**Lighting**	A minimum of 75% of the lamps in permanently installed lighting figures must be high-efficiency lamps.
15	**Certification**	Complete a *Vermont Residential Building Energy Standards Certificate* for each dwelling. Send one copy to the Vermont Public Service Department and one copy to the town clerk of the town in which the property is located, and affixes the original on or near the home's electrical panel or heating equipment.
16	**Heat Pump Supplementary Heat**	Ductless air-source heat pumps may not have supplementary electric-resistance heat integral to the unit.

For full details about any of these requirements, see Appendix C.

DRAFT

Section 7.4

What is the HERS Index?
The Home Energy Rating System (HERS) Index is the industry standard by which a home's energy efficiency is measured. It is also the nationally-recognized system for inspecting and calculating a home's energy performance.

How does the HERS Index work?
A certified Home Energy Rater assesses the energy efficiency of a home, assigning it a relative performance score. The lower the number, the more energy efficient the home.

To calculate a home's HERS Index Score, a certified RESNET HERS Rater does an energy rating on your home and compares the data against a 'reference home'– a designed-model home of the same size and shape as the actual home, so your score is always relative to the size, shape and type of house built.

A HERS Index Score is like a home's MPG (miles-per-gallon) sticker, which tells how energy efficient the home is. The lower the score, the more energy efficient the home. The Home Energy Rating System (HERS) Index is the nationally recognized system for inspecting, testing and calculating a home's energy performance.

The Home Energy Rating

A home energy rating is a standard measure of a home's energy efficiency. In order to be used for Code compliance, home energy ratings must be performed by a Vermont state-accredited rating organization. A Builder signature is still required on Vermont Residential Building Energy Standards certificate for homes meeting the RBES performance requirements through the Energy Rating Compliance method.

In order to comply with the Code using this method, a completed home must meet the Basic Requirements for Home Energy Ratings (Table 7-1), meet the Ventilation and Combustion Safety

Table 7-2

Maximum Energy Rating Index for Base and Stretch Codes

Target	Base Code	Stretch Code	Description
Code Target	60	54	Maximum HERS Index to demonstrate code compliance
Sub-Target	65	65	Maximum HERS Index without any renewables incorporated
Renewables Adder	5	11	Maximum HERS Index points that can be counted towards Code Target

Table 7-2 shows the maximum HERS scores allowed for compliance with the Base and Stretch codes for all residential structures, including log homes. The Base Code target is 60, though renewables can be used to achieve this target. However, only 5 HERS points may be achieved through renewables, meaning the maximum HERS rating before renewable points are added is 65.

Similarly, the Stretch Code target is 54, though 11 points may be achieved through renewables. This means the home must achieve a HERS rating of 65 without including renewables, then achieve an additional 11 HERS points through renewables to meet the HERS 54 Stretch Code Target.

These values are based on REM/Rate version 14. If the HERS Index scale is revised in subsequent versions of the software, the Public Service Department may update these Index points.

Requirements (Chapter 3), *and* earn an energy rating score in compliance with the requirements in Table 7-2.

Home Energy Rating services can be used to verify Code compliance of a completed home. The recommended procedure is to follow the following steps:

1. **Plan Review:** You submit plans and specifications, and the rating organization issues a "proposed" energy rating. If the home does not meet the Code as designed, the organization recommends changes that will ensure compliance.
2. **Design Changes:** In the event that changes are made to the thermal and mechanical efficiency features, modifications can be analyzed to determine whether the new design complies with the Code.
3. **Final Inspection:** When the home is complete, the rating organization conducts a final inspection, including a blower-door test to evaluate the home's airtightness. Final documentation is provided showing whether the home meets the Residential Energy Code.

NOTE: It is your responsibility as builder to sign, file and post the Vermont Residential Building Energy Standards Certificate upon completion of construction. Here's how:

1. Complete the certificate when the home is *100% finished*. See Chapter 8 for detailed instructions.
2. Within 30 days, send one copy each to:

   ★ *The town clerk* for the town or city in which the home is located. (Note: Check local procedures before filing the certificate; local fees and forms may be required.)

   ★ *The Vermont Public Service Department*
   Planning & Energy Resources Division
   112 State Street
   Montpelier, VT 05620-2601

   If the home is participating in a utility "new construction" program, check with the utility; you may need to provide a copy in order to receive an efficiency incentive or rebate.

   Be sure to keep one copy for your records as well.

3. Post the original certificate in the home, affixing the label on or near the electrical service panel or heating equipment.

DRAFT

This chapter explains:
- ★ How self-certification works.
- ★ How to complete the two types of certification.
- ★ Where and when to file copies.

Chapter 8

Certification

DRAFT

The Vermont Residential Energy Code is one of the few codes in the country where the builder self-certifies that the home complies with the law. Builders are responsible for understanding the Residential Energy Code, for building to the minimum (or better) standards, and for completing and filing a document.

Section 8.1

Types of Certification

Certification is accomplished by verifying the thermal and efficiency features of the home in the as-built condition. These features are recorded on one of two documents, depending on the situation:

1. If the home meets the technical requirement of the Residential Energy Code, a *Vermont Residential Building Energy Standards Certificate* (Figure 8-1) must be completed, filed and posted in the home.
2. If the home qualifies for the Owner/Builder Special Provision (see Section 1.4), a *Vermont Owner/Builder Disclosure Statement* (Figure 8-2) must be completed, filed and disclosed to prospective buyers. Homes covered under this provision do not have to meet the technical requirement of the Code, but documentation must be provided to the buyer prior to a purchase and sales agreement when the home is sold.

Section 8.2

The 'Vermont Residential Building Energy Standards Certificate'

A *Vermont Residential Building Energy Standards Certificate* must be filed for each home covered by the Residential Energy Code. The certificate documents compliance with the Code and represents your statement that the information it contains is accurate. The certificates are printed on a one-page label with a peel-off back so they can be posted on or near the electric-service panel or heating equipment). After the certificate is filled out, it must be photocopied to produce the necessary copies for filings and for your records. It is permissible to photocopy an original certificate and post the copy on or near the electrical panel or heating equipment in the home.

Fig. 8-1: Example of the *Vermont Residential Building Energy Standards Certificate*

2015 Vermont Residential Building Energy Standards (RBES) Certificate

This certificate is for projects started on or after March 1, 2015.

Before completing this form, refer to the instructions in Section 8.2a of the Residential Energy Code Handbook (4th edition).
For additions, alterations, renovations or repairs, only fill out applicable portions of certificate.

Property Address (Street, City, ZIP Code) _____ Act 250 Permit # _____

Electric Utility serving this address _____ Construction START Date _____ Construction FINISH Date _____

Units _____ # Stories _____ # Conditioned Sq. Ft. _____ # Bedrooms _____

Project Description
- ☐ [redacted]le Family
- ☐ [redacted]-family
- ☐ [redacted]Home
- [redacted]ovation / Alteration

Foundation Type: ☐ [redacted]n t ☐ [redacted]n Grade ☐ [redacted]Space

Thermal Envel[redacted]

R-_____Basement / Crawl Space Walls
R-_____Unheated Slab
R-_____Heated Slab
R-_____Perimeter Slab Edge
U-_____Windows ☐ [redacted]

_____Basement Insulation Depth (ft)
R-_____Floors over Unheated Spaces
R-_____Above-Grade Walls
U-____Doors ☐ [redacted]
R-_____Attic [redacted]

U-_____Basement Windows ☐ [redacted]
R-_____Sloped Ceilings [redacted]
R-_____Flat Ceilings [redacted]
U-_____Skylights ☐ [redacted]

Air Sealing [redacted]ed by: ☐ [redacted] _____ACH50_____CFM50 ☐ [redacted]nspection

Ventilation System ☐ [redacted] ☐ [redacted]d Air Flow:_____CFM ☐ [redacted] ☐ [redacted]ed

Mechanical System C[redacted]eth[redacted] ☐ [redacted] Manual J 8th Edition [redacted]

Primary Heating System Size (Btuh) _____ [redacted] Central Cooling System Size (Btuh) _____ ☐ [redacted]
Calculated Heat Loss (Btuh) _____ [redacted]d Heat Gain (Btuh) _____ ☐ [redacted]mmable Thermostat
AFUE or HSPF Efficiency _____ SEER or COP Efficiency _____ ☐ [redacted]ump Supplementary Heat Control
[redacted]t Pump Supplied

Ducts ☐ [redacted]located within conditioned space
R-_____Supply D[redacted] _____Location _____Duct Tightness (CFM @ 25 Pa.)
R-_____Return D[redacted] _____Location Test Performed at ☐ [redacted]n ☐ [redacted]struction

Combustion Safety ☐ [redacted]e testing conducted on combustion equipment not d[redacted]d [redacted]
☐ [redacted]uel burning appliances and fireplaces have gasketed doors with compression closure
☐ [redacted]or air supply requirements met for solid fuel-burning appliances and fireplaces

Other
- ☐ [redacted]m Piping, R-3
- ☐ [redacted]lating service hot water piping, R-3
- ☐ [redacted]matic or Gravity dampers
- ☐ [redacted]matic controls for snow-melt systems
- ☐ [redacted]sible on-off switches for pool heaters
- ☐ [redacted]atic time switches for pool heaters
- ☐ [redacted]over for all heated pools
- ☐ [redacted]f lamps in permanently installed fixtures are high efficancy

Compliance Me[redacted]d Prescriptive ☐ [redacted]e #_____ ☐ [redacted]ck Software Maximum UA_____Your UA _____
☐ [redacted] Energy Rating Ratin[redacted]___ Rated by _____

I certify to _____ [redacted] that the above information is correct and that the premises listed HAVE been constructed in accordance with the Vermont Residential Building Standards (RBES) created under 21 V.S.A. § 266.

Signature _____ Print Name _____

Company _____ Phone _____ Date _____

21 V.S.A. § 266 requires this certificate label to be permanently affixed to the inside electrical service panel or *heating or cooling equipment or nearby in a visible location.* Copies also must be provided within 30 days following the sale of the property, to 1) the Dept. of Public Service, Planning & Energy Resources Division, 112 State St., Montpelier, VT 05602, and 2) the town clerk of the town where the property is located. NOTE: Noncompliance with RBES may result in action for damages under 21 V.S.A. § 266. This label does not specify all 2011 RBES requirements. **QUESTIONS? CALL THE VT DEPT. OF PUBLIC SERVICE: 802-828-2811.**

DRAFT

Section 8.2a

Instructions for Completing the 'Vermont Residential Building Energy Standards Certificate'

Read these instructions in their entirety before completing the *Vermont RBES Certificate* for your home. Items are listed in **bold** in the order they appear on the certificate.

1. If the dwelling received an Act 250 Permit, list the **Act 250 Permit #**. If not, check **N/A**.
2. List the dwelling **Site**, including the complete street *and* mailing **Address**, **Town** and **Zip code**.
3. List the **Electric Utility** providing electric service to the dwelling. If the dwelling has no electricity, state none. If electricity is provided by a stand-alone system, indicate the system type, such as photovoltaic, wind turbine, propane generator, etc.
4. List the **Construction Start** and **Construction Completion** dates by **Month/Year**. **Construction Start** is when site work began, when the ground was first dug to prepare for a below grade foundation or slab on grade, etc. **Construction Completion** is when the dwelling is sufficiently ready for occupancy.
5. **Project Description**: Check off all that apply. **Multi-family homes**: Write in the number of **Units**. For all Projects, write in the number of **Stories** above grade, and the **Conditioned sq. ft.** area, excluding unconditioned spaces, such as an unconditioned garage or unheated basement. Write in the **Number of Bedrooms**.
6. **Foundation Type**: Check off all that apply.
7. **Thermal Envelope**: Where applicable, list the nominal **R**-value of the insulation. If any component has more than one R-value (e.g., R-38 ceiling and R-49 ceiling), calculate an average R-value and that figure on the form. (See Section 2.5, "How to Calculate Average R-values and U-values.") For basement walls, list the vertical height of the basement insulation in **Insulation Depth** in feet (**ft**.).
8. **Doors and Windows**: Where applicable, list the **U**-Value. If the **U**-value is not an **NFRC** (National Fenestration Rating Council) **Rating**, list the **Default Rating** (refer to Appendix B, Table B-1). **Check rating type** — either **NFRC** or **Default Rating**. Note: If there is not enough space in this section to list each thermal envelope component, list additional information under **Other Energy Features**.
9. **Air Sealing**: Check whether air sealing was verified by visual inspection or blower door testing. If tested, list the envelope air leakage rate.
10. **Ventilation System**: Check whether the ventilation system is "**Exhaust**" or "**Balanced**." List the **Ventilation Air Flow** rate in cubic feet per minute and check off if the flow rate is either **Rated** or **Tested**.
11. **Mechanical Systems**: Check the system sizing **Calculation Method**. Note the **System Size, Design Heat Loss/Gain** and **Efficiency** of the Primary Heating and Cooling System.
12. **Programmable Thermostat**: Check whether a programmable thermostat is installed.
13. **Heat Pump Supplementary Heat Control**: Check whether a control was installed on heat pump supplementary heat.
14. **Duct:** Check if ducts are located within conditioned space. If located in unconditioned space, list insulation R-values for supply and return ducts and their location. List the tested duct leakage rate.
15. **Combustion Safety**: Check if spillage testing was conducted on combustion equipment that is not directly-vented or power vented. Check if fireplaces have gasketed doors with compression closure. Check if exterior air supply requirements have been met for solid fuel-burning appliances and fireplaces.

Read the instructions in their entirety before completing the Vermont RBES Certificate.

To order additional certificates, contact one of these resources:

★ Energy Code Assistance Center
1-855-887-0673.

★ Vermont Public Service Department
1-802-828-2811.

★ The organizations listed in Appendix E, "Vermont Resources for Energy Efficiency & Utility Services."

★ Act 250
Natural Resources Board
1-802-828-3309.

DRAFT

16. **Other**: Check all that apply.
17. Under **Code Compliance Path**, check the compliance path by which you determined technical compliance with the Code.
    - ★ If compliance is determined using the RES*check* Software Method, list the **RES*check* maximum required UA** value and **Your home UA** value calculated by RES*check*.
    - ★ If compliance is determined using a home energy rating, list the **Final home energy rating** and the **Company** that determined the final rating score.
18. Under the certification section, list the name of the **owner** of the dwelling.
19. **Signature**: This is the signature of either the builder who directed construction or of another party authorized to certify Code compliance. **Company**: List the business name of the party certifying compliance. **Print** the **Name** of the person whose **Signature** is presented. List the **Phone** number of the **Company** certifying compliance (including area code) and the **Date** (month and year) the certificate is signed and completed.

Section 8.2b

Filing the 'Vermont Residential Building Energy Standards Certificate'

Once the certificate is completed, you need to file the required copies and attach the original to the house:

1. Make at least three copies of the completed certificate, retaining one for your records.
2. Attach the original certificate to the house by permanently affixing it on or near the electrical service panel or heating equipment, without covering or obstructing the visibility of the circuit directory label, service disconnect label or other required labels.
3. Within 30 days of completing construction, send one copy each to:
    - ★ The town clerk for the town or city in which the home is located. (Note: Check local procedures before filing the certificate; local fees and forms may be required.)
    - ★ The Vermont Public Service Department (Planning & Energy Resources Division, 112 State Street, Drawer 20, Montpelier VT 05620-2601).

DRAFT

Section 8.3

The 'Vermont Owner/Builder Disclosure Statement'

As outlined in Section 1.4, "Owner/builder" projects are exempt from the technical requirements of the Code, but the owner/builder must meet certification requirements by completing and filing a disclosure statement. To qualify for this provision, *all* of the following criteria must be met:

1. The property must not be subject to Act 250.
2. The owner must be the builder and direct the details of construction and the selection and installation of materials.
3. The owner must live in the building.
4. The owner must evaluate whether the home meets the Residential Energy Code.
5. The owner must complete and file a *Vermont Owner/Builder Disclosure Statement*.
6. Before entering into a binding purchase and sale agreement, the owner must provide a copy of this statement to a prospective buyer.

DRAFT

Section 8.3a

Instructions for Completing the 'Vermont Owner/Builder Disclosure Statement'

Read the instructions in their entirety *before* completing the form. (See sample on the next page.) This form is very similar to the *Vermont Residential Building Energy Standards Certificate* in Section 8.2; follow the instructions in Section 8.2a to fill out either one. There are only three differences between the two forms:

1. The *Vermont Owner/Builder Disclosure Statement* cannot be used for Act 250 projects. (Act 250 projects must meet the technical requirement of the Residential Energy Code.)
2. The signature area on this form does not include a space for you to list a company name.
3. This form states that the home does ***not*** meet the Code's technical requirement.

Section 8.3b

Filing the Vermont Owner/Builder Disclosure Statement

If you are using the form to notify a potential buyer, you must do so *before* entering into a binding purchase and sales agreement. Once the home is sold, you need to file the required copies with the town and state. The process for filing this statement is identical to that for the *Vermont Residential Building Energy Standards Certificate* in Section 8.2b.

Figure 8-2: The *Vermont Owner/Builder Disclosure Statement*.

VERMONT OWNER/BUILDER DISCLOSURE STATEMENT

This home does not meet the technical requirements of the Vermont Residential Building Energy Standards (RBES) and is not required to do so. For additions, alterations, renovations or repairs, only fill out applicable portions of certificate.

Property Address (Street, City, ZIP Code) _____ Act 250 Permit # _____

Electric Utility serving this address _____ Construction START Date _____ Construction FINISH Date _____

Units _____ # Stories _____ # Conditioned Sq. Ft. _____ # Bedrooms _____

Project Description
- ☐ [redacted]le Family
- ☐ [redacted]tion
- ☐ [redacted]-family
- ☐ [redacted]ir
- ☐ [redacted]Home
- [redacted]ovation / Alteration

Foundation Type: ☐ [redacted]n t ☐ [redacted] Grade ☐ [redacted]pace

Thermal Envel[redacted]

R-_____Basement / Crawl Space Walls
R-_____Unheated Slab
R-_____Heated Slab
R-_____Perimeter Slab Edge
U-_____Windows ☐ [redacted]

_____Basement Insulation Depth (ft)
R-_____Floors over Unheated Spaces
R-_____Above-Grade Walls
U-_____Doors ☐ [redacted]
R-_____Attic [redacted]

U-_____Basement Windows ☐ [redacted]
R-_____Sloped Ceilings [redacted]
R-_____Flat Ceilings
U-_____Skylights ☐ [redacted]

Air Sealing [redacted] Verified by: ☐ [redacted] _____ACH50 _____CFM50 ☐ [redacted]nspection

Ventilation System ☐ [redacted] ☐ [redacted]d Air Flow:_____CFM ☐ [redacted] ☐ [redacted]ed

Mechanical System C[redacted]eth[redacted] ☐ [redacted] Manual J 8th Edition [redacted] _____

Primary Heating System Size (Btuh) _____ [redacted] Central Cooling System Size (Btuh) _____ ☐ [redacted]
Calculated Heat Loss (Btuh) _____ [redacted]d Heat Gain (Btuh) _____ ☐ [redacted]mmable Thermostat
AFUE or HSPF Efficiency _____ SEER or COP Efficiency _____ ☐ [redacted]mp Supplementary Heat Control

Ducts ☐ [redacted]located within conditioned space
R-_____Supply D[redacted] _____Location _____Duct Tightness (CFM @ 25 Pa.)
R-_____Return D[redacted] _____Location Test Performed at ☐ [redacted]n ☐ [redacted]nstruction

Combustion Safety ☐ [redacted]e testing conducted on combustion equipment not d[redacted]d
☐ [redacted]uel burning appliances and fireplaces have gasketed doors with compression closure
☐ [redacted]r air supply requirements met for solid fuel-burning appliances and fireplaces

Other
- ☐ [redacted]m Piping, R-3
- ☐ [redacted]lating service hot water piping, R-3
- ☐ [redacted]n atic or Gravity dampers
- ☐ [redacted]n atic controls for snow-melt systems
- ☐ [redacted]sible on-off switches for pool heaters
- ☐ [redacted]atic time switches for pool heaters
- ☐ [redacted]over for all heated pools
- ☐ [redacted]f lamps in permanently installed fixtures are high efficiency

Compliance M[redacted]d Prescriptive ☐ [redacted]e #_____ ☐ [redacted]k Software Maximum UA_____Your UA _____
☐ [redacted] Energy Rating Rating [redacted] Rated by _____

I certify to _____ [redacted] that the above information is correct and that the premises listed HAVE been constructed in accordance with the Vermont Residential Building Standards (RBES) created under 21 V.S.A. § 266.

Signature _____ Print Name _____

Company _____ Phone _____ Date _____

For Owner/Builder projects, 21 V.S.A. § 266 requires sellers to provide this statement to prospective buyers, prior to entering into a binding purchase and sale agreement, which itemizes how the home does not comply with Vermont RBES. Seller must send copies within 30 days following the sale of the property, to 1) the Dept. of Public Service, Planning & Energy Resources Division, 112 State St., Montpelier, VT 05620, and 2) the town clerk of the town where the property is located.

QUESTIONS? CALL THE VT PUBLIC SERVICE DEPARTMENT: 802-828-2811.

For copies of this form, photocopy this page or contact the Energy Code Assistance Center (855-887-0673).

DRAFT

Appendix A

Definitions

Above Grade Wall A wall more than 50% above grade and enclosing *conditioned space*. This includes between-floor spandrels, peripheral edges of floors, roof and basement knee walls, dormer walls, gable end walls, walls enclosing a mansard roof and skylight shafts.

Accessible Admitting close approach as a result of not being guarded by locked doors, elevation or other effective means (see also Readily Accessible).

Addition An extension or increase in the *conditioned* space floor area or height of a building or structure.

AFUE *Annual Fuel Utilization Efficiency*. The ratio of annual output energy to annual input energy which includes any non-heating season pilot input loss, and for gas or oil-fired furnaces or boilers, does not include electrical energy.

Air Barrier An air barrier is a durable assembly that blocks air flow between conditioned space and unconditioned space. Air barriers must be continuous, sealed at all joints, penetrations, and interruptions using durable sealants intended for such use and compatible with all adjacent materials, and able to resist pressures without displacement or damage.

Alteration Any construction or renovation to an existing structure other than repair or addition. Also, a change in a mechanical system that involves an extension, addition or change to the arrangement, type or purpose of the original installation.

Approved Approval by the *code official or other authority having jurisdiction* as a result of investigation and tests conducted by him or her, or by reason of accepted principles or tests by nationally recognized organizations.

Approved Agency An established and recognized agency regularly engaged in conducting tests or furnishing inspection services, when such agency has been approved by the *code official or other authority having jurisdiction, where one exists*.

Automatic Self-acting, operating by its own mechanism when actuated by some impersonal influence, as, for example, a change in current strength, pressure, temperature or mechanical configuration (see also Manual).

Average R-value For a single building component with two different thermal values, it is possible to calculate a "weighted" or "average" R-value. See Section 2.5 for instructions.

Base Code The standard RBES Energy Code, as distinct from the higher stringency *Stretch Code.*

Basement Wall A wall 50% or more below grade and enclosing *conditioned space*.

Basement Windows Windows that are installed in concrete walls of basements, generally less than 10 square feet.

Basic Requirements The set of fixed requirements applicable to all homes using the Prescriptive and Software methods of compliance.

Bathroom A room containing a bathtub, shower, spa or similar bathing fixture.

Bedroom A room or space 70 square feet or greater, with egress window and closet, used or intended to be used for sleeping. A "den," "library," "home office" with a closet, egress window, and 70 square feet or greater or other similar rooms shall count as a bedroom, but living rooms and foyers shall not.

Biomass The vegetation removed from the forest, usually logging slash, small-diameter trees, tops, limbs, or trees. This includes wood logs, wood pellets and wood chips.

BTU Abbreviation for British thermal unit, which is the quantity of heat required to raise the temperature of 1 pound (0.454 kg) of water 1°F (0.56°C), (1 Btu = 1,055 J).

Figure A-1: ***Walkout Basement Example***

Wall A is more than 50% below grade (basement wall)
All others are 5% or more above grade (exterior walls)

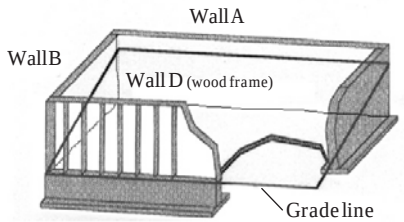

DRAFT

Builder The general contractor or other person in charge of construction, who has the power to direct others with respect to the details to be observed in construction.

Building Any structure used or intended for supporting or sheltering any use or occupancy, including any mechanical systems, service water heating systems and electric power and lighting systems located on the building site and supporting the building.

Building Envelope The basement walls, exterior walls, floor, roof, and any other building element that encloses *conditioned space*. This boundary also includes the boundary between *conditioned space* and any exempt or unconditioned space.

Building Site A contiguous area of land that is under the ownership or control of one entity.

Ceiling Ceiling requirements apply to portions of the roof and/or ceiling through which heat flows. Ceiling components include the interior surface of flat ceilings below attics, the interior surface of cathedral or vaulted ceilings, the interior surface of dormers, and bay window roofs. Ceiling components do *not* include skylights, which are considered part of glazing. The ceiling requirements also apply to floors over outside air, including floor cantilevers, floors of an elevated home, and floors of overhangs (such as the floor above a recessed entryway or open carport).

★ Ceiling area should be measured from the exterior dimensions over the conditioned space (including the *sloped* area cathedral ceilings).

★ Ceiling insulation that does not maintain a consistent R-value across the entire ceiling (including over the top of exterior walls) cannot be given full R-value credit. If a "raised truss" or other means of ensuring full insulation R-value over the top of exterior walls is not installed, you must install R-49 insulation.

Ceiling Flats Horizontal portions of the building with unconditioned or exposed space above and conditioned space below.

Ceiling Slopes Exterior portions of the building with unconditioned or exposed space above and with conditioned space below that are between 1° and 60° of horizontal. (See also Exterior Wall)

Code Official The officer or other designated authority charged with the administration and enforcement of this code, or a duly authorized representative. The Department of Public Service is not the code official and shall not be required to conduct inspections of construction or construction documents.

Commercial Building For this code, all buildings that are not included in the definition of "residential buildings, excluding mobile homes."

Condensing Unit A specific refrigerating machine combination for a given refrigerant, consisting of one or more power-driven compressors, condensers, liquid receivers (when required), and the regularly furnished accessories.

DRAFT

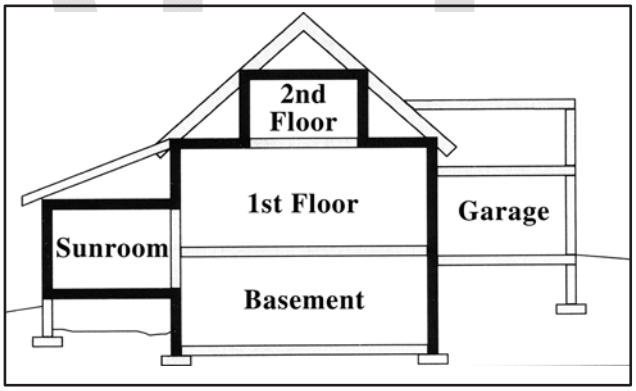

Figure A-2:
Building Envelope Example 1
The dark line delineates the building envelope. This illustration shows a house over a conditioned basement (i.e., no basement ceiling insulation), with a sun room over unconditioned crawl space (i.e., insulation in crawl space ceiling).

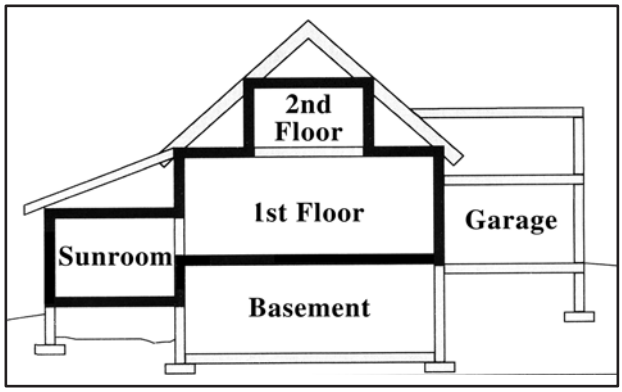

Figure A-3:
Building Envelope Example 2
This depicts the same house with an unconditioned basement (i.e., basement ceiling insulation). Note that the wall between sun room and basement is included.

Conditioned Space An area, room or space that is enclosed within the building thermal envelope and that is directly or indirectly heated or cooled. Spaces are indirectly heated or cooled where they communicate through openings with conditioned spaces, where they are separated from conditioned spaces by uninsulated walls, floors or ceilings, or where they contain uninsulated ducts, piping or other sources of heating or cooling.

Continuous Air Barrier A combination of materials and assemblies that restrict or prevent the passage of air through the building thermal envelope.

Continuous Insulation (ci) Insulating material that is continuous across all structural members without thermal bridges other than fasteners and service openings. It is installed on the interior or exterior, or is integral to any opaque surface, of the building envelope.

COP *Coefficient of Performance.* The ratio of the rate of heat delivered (or heat removed) to the rate of energy input, in consistent units, for a complete heat pump (or cooling) system under designated operating conditions. Do not consider supplemental heat when checking compliance with the heat pump equipment.

Covered Buildings See Chapter 1 for complete definitions of buildings that are covered and not covered by the Residential Energy Code.

Crawl Space Wall The opaque portion of a wall that encloses a crawl space and is partially or totally below grade.

Cubic Feet per Minute (CFM) The quantity of air moved in 1 minute. A measurement typically applied to ventilation equipment.

Demand Recirculation Water The quantity of air moved in 1 minute. A measurement typically applied to ventilation equipment.

Demand Recirculation Water System A water distribution system where pump(s) prime the service hot water piping with heated water upon demand for hot water.

Direct-Vent Appliances Appliances that are constructed and installed so that all air for combustion is derived directly from the outside atmosphere and all flue gases are discharged directly to the outside atmosphere.

Doors Doors include all openable opaque assemblies located in exterior walls of the building envelope.

★ *If door is less than 50% glass:* Doors with less than 50% glass are treated as a single door assembly, in which case an average U-value (a U-value that includes both the glass and opaque area) must be used.

★ *If door is more than 50% glass:* The entire opaque and glass areas of doors with more than 50% glass (i.e., sliding or patio doors) are considered glazing.

★ If you have a decorative or other less energy-efficient door, you need not include that door in the U-value requirements for doors when using the Fast-Track method. The Residential Energy Code allows one door to be exempt when using either of these methods.

Duct A tube or conduit utilized for conveying air. The air passages of self-contained systems are not to be construed as air ducts.

Duct System A continuous passageway for the transmission of air that, in addition to ducts, includes duct fittings, dampers, plenums, fans and accessory air-handling equipment and appliances.

Dwelling Unit A single housekeeping unit of one or more rooms providing complete, independent living facilities, including permanent provisions for living, sleeping, eating, cooking and sanitation.

EER *Energy Efficiency Ratio.* The ratio of net equipment cooling capacity in Btu/hour to total rate of electric input in watts under designated operating conditions. When consistent units are used, this ratio becomes equal to COP (see also Coefficient of Performance).

Residential Energy Code Short term for Vermont's "Residential Building Energy Standards," or Act 40 of 2009.

Energy Factor The seasonal efficiency rating (e.g., 0.61 "EF" or "Energy Factor") for domestic water heaters as determined by a standardized Department of Energy test procedure.

Energy Rating A uniform method of ranking homes based on energy efficiency. Energy rating scores range from 0 to 100 points and 1 to 5 Stars Plus. Eighty points, the beginning of the 4 Star range, is considered "energy efficient." The Residential Energy Code allows an energy rating to be used to document compliance. See Chapter 6 for details.

Energy Recovery Ventilation System (ERV) Systems that employ air-to-air heat exchangers to recover energy from exhaust air for the purpose of preheating, precooling, humidifying or dehumidifying outdoor ventilation air prior to supplying the air to a space, either directly or as part of an HVAC system.

ERI Reference Design A version of the rated design that meets the minimum requirements of the 2006 *International Energy Conservation Code.*

Exterior Envelope See Building Envelope.

DRAFT

Exempt Buildings See Chapter 1 for complete definitions of buildings that are covered and not covered by the Residential Energy Code.

Exterior Walls Walls including both above-grade walls and basement walls.

Fast-Track Method The easiest procedure for demonstrating compliance with the technical requirements of the Residential Energy Code. Homes must comply with all of the Basic Requirements in addition to one of the packages in the corresponding Fast-Track Prescriptive Requirements Table. See Chapter 5.

Fenestration Skylights, roof windows, vertical windows (fixed or moveable), opaque doors, glazed doors, glazed block and combination opaque/glazed doors. Fenestration includes products with glass and nonglass glazing materials.

Fenestration Product, Site Built A fenestration designed to be made up of field-glazed or field-assembled units using specific factory cut or otherwise factory-formed framing and glazing units. Examples of site-built fenestration include storefront systems, curtain walls and atrium roof systems.

Floors Floors are considered individually for compliance purposes depending on their configuration and exposure:

★ Floors over "unconditioned spaces" (such as floors over an unheated garage, a vented crawl space, or an unconditioned basement) must be insulated.

★ "Exposed" floors over outside air (such as floors of overhangs, cantilevers, and floors of an elevated home) must be insulated to the R-values of ceiling flats.

★ Slab-on-grade floors of conditioned spaces must be insulated along the slab perimeter and are not required to be insulated underneath.

★ Floors of basements and crawl spaces are not subject to an insulation requirement and do not have to be included as a building envelope component, even if the basement or crawl space is conditioned. In these cases, the walls must be insulated.

★ Floors separating two conditioned spaces are not subject to an insulation requirement and do not have to be included as a building envelope component (although the band joist of these floors is considered part of the exterior walls for calculation proposes and is subject to the same R-value requirements).

Furnace, Warm Air A self-contained, indirect-fired or electrically heated furnace that supplies heated air through ducts to spaces that require it.

Glazing Glazing is any translucent or transparent material in exterior openings of buildings (including windows, skylights, sliding glass doors, swinging/patio glass doors, basement windows and glass block). If a door has more than 50% glass (e.g., swinging or patio doors), it is considered part of the glazing area and not a "door." If a door has less than 50% glass, the entire unit (opaque *and* glass areas) is defined as a "door."

★ Windows in the exterior walls of *conditioned* basements (i.e., without ceiling insulation) *should* be included in the glazing-area calculations. Windows in walls of basements or crawl spaces with insulated ceilings are *not* included. Also be sure to include skylights in glazing area calculations and U-value requirements.

★ Window U-value requirements for conditioned basements are treated separately from the rest of the glazing in the house under the Fast-Track method.

Glazing Area The area of a glazing assembly is the interior surface area of the entire assembly, including glazing, sash, curbing, and other framing elements. The rough opening is also acceptable (for flat windows).

Glazing Percentage The total glazing area divided by the gross wall area, then multiplied by 100.

Gross Wall Area Includes the opaque area of above-grade walls, the opaque area of any individual wall of a conditioned basement more than 50% above grade (including the below-grade portions), all windows and doors (including windows and doors of conditioned basements), and the peripheral edges of floors (i.e., band joists).

Heat Pump A refrigeration system that extracts heat from one substance and transfers it to another portion of the same substance or to a second substance at a higher temperature for a beneficial purpose.

Heat Recovery Ventilation System (HRV) A factory-assembled device or combination of devices, including fans or blowers, designed to provide outdoor air for ventilation in which heat or heat and moisture is transferred between two isolated intake and exhaust air streams.

Heat Trap An arrangement of piping and fittings, such as elbows, or a commercially available heat trap that prevents thermosyphoning of hot water during standby periods.

Heating Seasonal Performance Factor (*HSPF*) The total heating output of a heat pump during its normal annual usage period for heating, in Btu's, divided by the total electric energy input during the same period, in watt hours, as determined by DOE 10 CFR Part 430, Subpart B, Test Proceedures, and based on Region 4.

High-Efficiency Lamps Compact fluorescent lamps, T-8 or smaller diameter linear fluorescent lamps, or lamps with a minimum efficacy of:

★ 60 lumens per watt for lamps over 40 watts;

★ 50 lumens per watt for lamps over 15 watts to 40 watts; and

DRAFT

★ 40 lumens per watt for lamps 15 watts or less.

DRAFT

Historic Building Any building or structure that is one or more of the following:

1. Listed, or certified as eligible for listing by the State Historic Preservation Officer or the Keeper of the National Register of Historic Places, in the National Register of Historic Places.
2. Designated as historic under an applicable state or local law.
3. Certifi d as a contributing resource within a National Register-listed, state-designated or locally designated historic district

Home Energy Rating System (HERS) A home energy rating system accredited by the Vermont Department of Public Service that provides a numerical rating in compliance with 21 V.S.A. § 267(a). The purpose of this procedure is to ensure that accurate and consistent home energy ratings are performed by accredited HERS providers in Vermont and to promote an objective, cost-effective, sustainable home energy rating process as a compliance method for residential building energy codes; as qualification for energy programs designed to reach specific energy-saving goals; and as a way to provide Vermont's housing market the ability to differentiate residences based on their energy efficiency.

Hunting Camp A seasonal building used as a temporary residence only during hunting season.

HVAC Heating, ventilating and air conditioning.

HVAC System The equipment, distribution network, and terminals that provide either collectively or individually the processes of heating, ventilating, or air conditioning to a building.

★ **Components:** HVAC system components provide, in one or more factory-assembled packages, means for chilling or heating water, or both, with controlled temperature for delivery to terminal units serving the conditioned spaces of the building. Types of HVAC system components include, but are not limited to, water chiller packages, reciprocating condensing units and water source (hydronic) heat pumps (see also HVAC System Equipment).

★ **Equipment:** HVAC system equipment provides, in one (single package) or more (split system) factory-assembled packages, means for air circulation, air cleaning, air cooling with controlled temperature and dehumidification and, optionally, either alone or in combination with a heating plant, the functions of heating and humidifying. The cooling function is either electrically or heat operated and the refrigerant condenser is air, water or evaporatively cooled. Where the equipment is provided in more than one package, the separate packages shall be designed by the manufacturer to be used together. The equipment shall be permitted to provide the heating function as a heat pump or by the use of electric or fossil-fuel-fired elements. (The word "equipment" used without a modifying adjective, in accordance with common industry usage, applies either to HVAC system equipment or HVAC system components.)

Infiltration The uncontrolled inward air leakage into a building caused by the pressure effects of wind or the effect of differences in the indoor and outdoor air density or both.

Insulated Siding A type of continuous insulation with manufacturer-installed insulating material as an integral part of the cladding product having a minimum *R*-value of R-2.

Level 1 Electric Vehicle Charging Station Level 1 charging uses a standard 120V outlet.

Level 2 Electric Vehicle Charging Station Level 2 uses a 240 volt AC charging.

Lighting See "High-Efficacy Lamps/Lighting".

Log Home A home in which the primary exterior walls are made of lengths of whole logs, one on top of the other, with the inside and outside surfaces the opposite sides of the same logs.

Local Ventilation A mechanical ventilation system including fans, controls and ducts, dedicated to exhausting moisture-laden air to the outside of the building from the room or space in which the moisture is generated.

Manual Capable of being operated by personal intervention (see also Automatic).

Mixed-Use With respect to a structure that is three stories or less in height and is a mixed-use building that shares residential and commercial users, the term "residential building" must include the living spaces in the structure and the nonliving spaces in the structure that serve only the residential users such as common hallways, laundry facilities, residential management offices, community rooms, storage rooms, and foyers. (From Vermont 30 VSA § 51.)

Mobile Home Homes subject to Title VI of the National Manufactured Housing Construction & Safety Standards Act of 1974 (i.e., single- and double-wide homes on a permanent chassis with detachable wheels). Mobile homes are exempt from the Residential Energy Code, but site-built components (e.g., conditioned basements or crawl spaces) must comply.

Manufactured Home Factory-built modular homes that are *not* subject to Title VI of the National Manufactured Housing Construction & Safety Standards Act of 1974 (i.e., homes not on a permanent chassis).

Multi-family A building containing three or more dwelling units.

DRAFT

Multiport A whole-house ventilation system that has more than one exhaust or supply port inside the house.

NFPA National Fire Protection Agency. Within the Residential Energy Code, NFPA 54 references the "Gas Code"; NFPA 31 references the "Oil Code."

Net Wall Area Gross wall area minus the rough opening area of all glazing and doors. Also called the "opaque area." The net wall area includes the opaque wall area of all above-grade walls enclosing conditioned spaces, the opaque area of conditioned basement walls more than 50% above grade (including the below-grade portions), and peripheral edges of floors (i.e., band joists). The net wall area does *not* include windows, doors, or other such openings.

Nominal R-value The R-value of an insulating material as listed on its packaging.

Occupancy The purpose for which a building, or portion thereof, is utilized or occupied.

Occupancy Classifications **Residential Group R** is the occupancy group used for buildings that include sleeping rooms and are not institutional and are not generally regulated by the International Residential Code. The IRC typically regulates single family homes and duplexes, any structure with more than two units is in the IBC. There are four different occupancy groups within R.

The first occupancy group is **R-1**. This group is for **transient uses** like hotels, motels and boarding houses.

The next group is **R-2**. R-2 is the group we see most often and it for residences where **occupants are primarily permanent**. This includes apartments, dormitories, fraternities and sororities. It also includes vacation timeshares (again with more than two units) and convents and monasteries. Congregate living facilities with 16 or fewer occupants go into group R-3.

R-3 is for permanent occupancies that aren't R-1, R-2, R-4 or I. These include buildings that are in the IBC but have no more than two units. Adult facilities and child care facilities that provide accommodation for five or less people less than 24 hours a day are R-3. Where these facilities are in a single family home they must comply with the IRC.

R-4 is for **residential care/assisted living facilities** including more than five and not more than 16 occupants.

Opaque Areas All exposed areas of the building envelope which enclose conditioned space, except openings for windows, skylights, doors and building service systems.

Outdoor Air Air taken from the outdoors and, therefore, not previously circulated through the building.

Owner-Builder If all of the following apply:

A. The owner of the residential construction is the builder, as defined under this chapter.

B. The residential construction is used as a dwelling by the owner.

C. The owner in fact directs the details of construction with regard to the installation of materials not in compliance with RBES.

D. The owner discloses in writing to a prospective buyer, before entering into a binding purchase and sales agreement, with respect to the nature and extent of any noncompliance with RBES. Any statement or certificate given to a prospective buyer must itemize how the home does not comply with RBES, and must itemize which measures do not meet the RBES standards in effect at the time construction commenced. Any certificate must be recorded in the land records where the property is located, and sent to the Department of Public Service, within 30 days following sale of the property by the owner.

Owner-Builder Disclosure Statement The form that an owner-builder must complete — and disclose to a prospective buyer before entering into a binding purchase and sale agreement — if the home does not meet the technical requirement of the Vermont Residential Energy Code. The owner must complete this form (see Chapter 8), and file copies with the appropriate town clerk and the Department of Public Service, within 30 days of construction completion.

Packaged Terminal Air Conditioner (PTAC) A factory-selected wall sleeve and separate unencased combination of heating and cooling components, assemblies or sections (intended for mounting through the wall to serve a single room or zone). It includes heating capability by hot water, steam or electricity.

Packaged Terminal Heat Pump A PTAC capable of using the refrigeration system in a reverse cycle or heat pump mode to provide heat.

Prescriptive Requirements The thermal (R-value and U-value) and heating efficiency (AFUE) values needed to meet the technical requirements of the Energy Code.

Power-Vented Appliance Appliances that operate with a positive vent static pressure (NFPA Category III) and utilize a mechanical fan to exhaust combustion gases from the appliance to the outside atmosphere.

Primary Fuel The fuel type that is used by the automatic heating system that is designed to provide heat to the majority of the building. Wood is never the primary fuel if there is another automatic heating system in place, regardless of the amount of heat it provides.

DRAFT

Primary Heating System The automatic heating system that is designed to provide heat to the majority of the building. A wood system is never the primary heating system if there is another automatic heating system in place, regardless of the amount of heat if provides.

Raised Truss Any roof/ceiling construction that allows the insulation to achieve its full thickness or R-value over the top plate of exterior walls. Several constructions allow for this, including elevating the heel (sometimes referred to as an "energy truss," "raised-heel truss" or "Arkansas truss"), use of cantilevered or oversized trusses, lowering the ceiling joists, framing with a raised rafter plate, or installing higher R-value insulation over the exterior wall top plates. See Figure B-1 for examples.

Rated Capacity In terms of ventilation, the volume of air (in cfm) that the fan can move against a given static pressure (in inches or water gauge). Prescriptive compliance with the Vermont Residential Building Energy Standard requires that all fan capacities be rated at 0.1 inch (25 Pa) of water gauge.

Rated Design A description of the proposed *building* used to determine the energy rating index.

RBES Vermont Residential Building Energy Standards.

Readily Accessible Capable of being reached quickly for operation, renewal or inspection without requiring those to whom ready access is requisite to climb over or remove obstacles or to resort to portable ladders or access equipment (see also Accessible).

RBES Certificate See "Vermont RBES Certificate."

Recovery Efficiency For water heaters, the percent of energy consumed that is transferred to heat the water when the appliance is firing. Does not include stand-by or off-cycle losses (see also Energy Factor).

Renewable Energy Sources Means energy produced using a technology that relies on a resource that is being consumed at a harvest rate at or below its natural regeneration rate including, but not limited to solar hot water, solar hot air, solar photovoltaics, wind, and hydro.

A. Methane gas and other flammable gases produced by the decay of sewage treatment plant wastes or landfill wastes and anaerobic digestion of agricultural products, byproducts, or wastes must be considered renewable energy resources, but no form of solid waste, other than agricultural or silvicultural waste, must be considered renewable.

B. The only portion of electricity produced by a system of generating resources that must be considered renewable is that portion generated by a technology that qualifies as renewable.

C. After conducting administrative proceedings, the Board may add technologies or technology categories to the definition of "renewable energy," provided that technologies using the following fuels must not be considered renewable energy supplies: coal, oil, propane, and natural gas.

D. Biomass is considered renewable.

Reroofing The process of recovering or replacing an existing *roof covering*. See "Roof recover" and "Roof replacement."

RES*check* Computer software available from the Residential Energy Code Assistance Center that determines compliance with the technical requirements of the Residential Energy Code. See Chapter 6.

Residential Buildings For this code, includes R-3 buildings, as well as R-2 and R-4 buildings three stories or fewer in height above grade.

Residential Construction New construction of residential buildings, or the construction of residential additions encompassing at least 500 square feet of new floor space.

Roof Recover The process of installing an additional *roof covering* over a prepared existing *roof covering* without removing the existing *roof covering*.

Roof Repair Reconstruction or renewal of any part of an existing roof for the purposes of its maintenance.

Roof Replacement The process of removing the existing *roof covering*, repairing any damaged substrate and installing a new *roof covering*.

Room Air Conditioner An encased assembly designed as a unit for mounting in a window or through a wall, or as a console. It is designed primarily to provide free delivery of conditioned air to an enclosed space, room or zone. It includes a prime source of refrigeration for cooling and dehumidification and means for circulating and cleaning air, and shall be permitted to also include means for ventilating and heating.

R-value The inverse of the time rate of heat flow through a body from one of its bounding surfaces to the other surface for a unit temperature difference between the two surfaces, under steady state conditions, per unit area ($h \bullet ft^2 \bullet {}^oF/Btu$) [$(m^2 \bullet K)/W$].

Seasonal Energy Efficiency Ratio (SEER) The total cooling output of an air conditioner during its normal annual usage period for cooling, in Btu/hour, divided by the total electric energy input during the same period, in watt-hours, as determined by DOE 10 CFR Part 430, Subpart B, Test procedures.

DRAFT

Self-Certify The act of certifying that a home complies with the Residential Energy Code through the following steps: 1) performing an analysis to determine if a home as planned will comply; 2) verifying that the home as built will comply; and 3) signing and filing the required documentation.

Service Systems All energy-using systems in a building that are operated to provide services for the occupants or processes housed therein, including HVAC, service water heating, illumination, transportation, cooking or food preparation, laundering and similar functions.

Service Water Heating Supply of hot water for purposes other than comfort heating.

Single-Family Home As defined by the Residential Energy Code, a single-family building is a detached one- or two-family (i.e., duplex) residential building. Log homes (see definition) are considered separately.

Skylight Glass or other transparent or translucent glazing material installed at a slope of less than 60 degrees (1.05 rad) from horizontal.

Slab Edge The perimeter of a slab-on-grade floor, where the top edge of the slab floor is above the finished grade or 12 inches or less below the finished grade. Insulation must be installed with the required R-value to a depth of at least 48" using any of the following configurations:

★ The slab insulation extends from the top of the slab downward.

★ The slab insulation extends from the top of the slab downward to the bottom of the slab and then horizontally underneath the slab for a minimum total distance of at least 48 inches.

★ The slab insulation extends from the top of the slab downward to the bottom of the slab and then horizontally away from the slab for a minimum total distance equal to at least 48 inches. The horizontal insulation must be covered by pavement or at least 10" of soil.

★ The top edge of insulation installed between the exterior wall and the interior slab can be cut at a 45 degree angle away from the exterior wall.

Figure A-4: ***Slab Edge Insulation Examples***

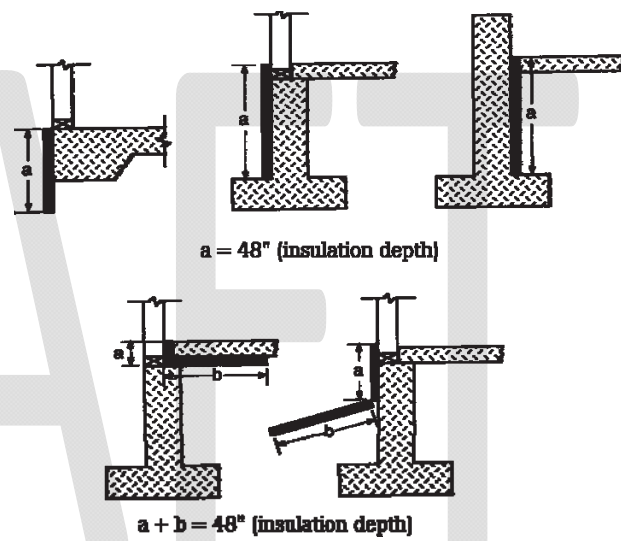

Sloped Ceiling See "Ceiling Slopes."

Solar Heat Gain Coefficient (SHGC) The ratio of the solar heat gain entering the space through the fenestration assembly to the incident solar radiation. Solar heat gain includes directly transmitted solar heat and absorbed solar radiation that is then reradiated, conducted or convected into the space. electric energy input during the same period, in watt-hours, as determined by DOE 10 CFR Part 430, Subpart B, Test procedures.

Sone A subjective unit of loudness for an average listener equal to the loudness of a 1,000-hertz (cycles per second) sound that has an intensity 40 decibels above the listener's own threshold of hearing.

Standard Truss Any construction that does not permit the roof/ceiling insulation to achieve the required R-value over the exterior walls.

Stretch Code A building energy code that achieves greater energy savings than the base RBES. The Stretch Code is required for Act 250 projects and may be adopted by municipalities.

Summer Camps Residential buildings constructed for non-winter occupation with only a biomass (wood) or other on-site renewable heating system.

Sunroom A one-story structure attached to a dwelling with a glazing area in excess of 40% of the gross area of the structure's exterior walls and roof.

System A combination of central or terminal equipment or components or controls, accessories, interconnecting means and terminal devices by which energy is transformed so as to perform a specific function, such as HVAC, service water heating or illumination.

Technical Requirements The technical requirement of the Residential Energy Code consists of two components: the Basic Requirements (see inside front cover and Appendix C) and the Prescriptive Requirements (see Chapters 5 to 7) of the Vermont Residential Energy Code.

DRAFT

Thermal Isolation Physical and space conditioning separation from *conditioned space(s)*. The *conditioned space(s)* shall be controlled as separate zones for heating and cooling or conditioned by separate equipment.

Thermal Resistance (*R*) The reciprocal of thermal conductance (h · ft2 · °F/Btu) [(m2 · K)/W].
Overall Thermal Resistance (*Ro*): The reciprocal of overall thermal conductance (h · ft2 · °F/Btu) [(m2 · K)/W]. The overall thermal resistance of the gross area or individual component of the exterior building envelope (such as roof/ceiling, exterior wall, floor, crawl space wall, foundation, window, skylight, door, opaque wall, etc.), which includes the area-weighted R-values of the specific component assemblies (such as air film, insulation, drywall, framing, glazing, etc.).

Thermal Transmittance (*U*) The coefficient of heat transmission (air to air). It is the time rate of heat flow per unit area and unit temperature difference between the warm side and cold-side air films (Btu/hr · ft2 · °F) [W/(m2 · K)]. The U-factor applies to combinations of different materials used in series along the heat flow path, single materials that comprise a building section, cavity airspaces and surface air films on both sides of a building element.
Overall Thermal Transmittance (*Uo*): The overall (average) heat transmission of a gross area of the exterior building envelope (Btu/h · ft2 · °F) [W/(m2 · K)]. The Uo-factor applies to the combined effect of the time rate of heat flow through the various parallel paths, such as windows, doors and opaque construction areas, comprising the gross area of one or more exterior building components, such as walls, floors or roof/ceilings.

Thermostat An automatic control device used to maintain temperature at a fixed or adjustable set point.

UA The U-value times the area of a building component.

Unconditioned Spaces Spaces enclosed within buildings that do not fall under the definition of "conditioned space." For example: garages separated from the house by insulated walls and/or ceilings; attics separated from the house by insulated floors; and basements and crawl spaces with insulated ceilings.

Unitary Cooling And Heating One or more factory-made assemblies which include an evaporator or cooling coil, a compressor and condenser combination, and which shall be permitted to include a heating function as well. When heating and cooling equipment is provided in more than one assembly, the separate assemblies shall be designed to be used together.

Unusually Tight Construction Construction meeting the following requirements:
1. Storm windows or weatherstripping on openable windows and doors; and
2. Caulking or sealants applied to areas, such as joints around window and door frames, between sole plates and floors, between wall-ceiling joints, between wall panels, at penetrations for plumbing, electrical and gas lines, and at other openings; and
3. Buildings constructed in compliance with the RBES shall be considered built of unusually tight construction.

U-value A measure of how well a material (or series of materials) conducts heat. U-values for window and door assemblies are the reciprocal of the assembly R-value (U = 1 / R). Windows and doors are usually rated using U-value rather than R-value. Lower numbers mean less heat loss and better performance. Equivalent to "U-factor."

Vapor Permeable Membrane A material or covering having a permeance rating of 5 perms (2.9 · 1040 kg/Pa · s · m^2) or greater, when tested in accordance with the desiccant method using Procedure A of ASTM E 96. A vapor permeable material permits the passage of moisture vapor.

Vapor Retarder A vapor-resistant material, membrane or covering such as foil, plastic sheeting or insulation facing. Vapor retarders limit the amount of moisture vapor that passes through a material or wall assembly.

Vapor Retarder Class A measure of the ability of a material or assembly to limit the amount of moisture that passes through that material or assembly. Vapor retarder class must be defined using the desiccant method with Procedure A of ASTM E 96 as follows:

- ★ Class 1: 0.1 perm or less, such as sheet polyethylene, unperforated aluminum foil.
- ★ Class 2: 0.1 < perm < 1.0 perm, such as kraft-faced fiberglass batts.
- ★ Class 3: 1.0 < perm < 10 perm, such as latex or enamel paint

Ventilation The natural or mechanical process of supplying conditioned or unconditioned air to, or removing such air from, any space.

Ventilation Air That portion of supply air that comes from outside (outdoors) plus any recirculated air that has been treated to maintain the desired quality of air within a designated space.

DRAFT

Venting System A continuous open passageway from the flue collar or draft hood of a solid fuel, gas-burning, kerosene or oil-burning appliance to the outside atmosphere for the purpose of removing flue or vent gases. A venting system is usually composed of a vent or a chimney and vent connector, if used, assembled to form the open passageway.

★ **Mechanical draft venting system:** A venting system designed to remove flue or vent gases by mechanical means, that consists of an induced draft portion under nonpositive static pressure or a forced draft portion under positive static pressure.

★ Forced-draft or power venting system. A portion of a venting system using a fan or other mechanical means to cause the removal of flue or vent gases under positive static vent pressure.

★ Induced draft venting system. A portion of a venting system using a fan or other mechanical means to cause the removal of flue or vent gases under nonpositive static vent pressure.

★ **Natural draft venting system:** A venting system designed to remove flue or vent gases under nonpositive static vent pressure entirely by natural draft.

★ **Sealed combustion venting system:** A venting system designed so that all air for combustion is derived directly from the outside atmosphere and all flue gases are discharged directly to the outside atmosphere.

★ **Whole-House Ventilation System, Single Port:** A whole-house ventilation system that has only one connection to the conditioned space and one connection to outdoor air.

★ **Whole-House Ventilation System, Supply Only:** Supply-only systems provide outdoor air for ventilation via a single fan or multiple fans. Stale air may exhaust through typical leaks in the building envelope. Supply-only systems may pressurize the indoor environment.

★ **Whole-House Ventilation System, Exhaust Only:** Exhaust only systems exhaust stale indoor air via a single fan, multiple fans or the installation of dual-purpose fans (i.e., serving both localized and whole house ventilation functions). Fresh incoming air may be provided by installed inlet ports or from typical leaks in the building envelope. Exhaust only systems may depressurize the indoor environment.

★ **Whole-House Ventilation System, Multi-Port:** A whole house ventilation system that has more than one exhaust or supply port inside the house.

★ **Whole-House Ventilation System, Single-Port:** A whole house ventilation system that has only one connection to the conditioned space and one connection to outdoor air.

Vermont RBES Certificate *Vermont Residential Building Energy Standards Certificate.* The one-page, adhesive-backed form that itemizes the energy components of a building and indicates its compliance with the Residential Energy Code. The builder must sign and affix this certificate to the property and provide one copy each to the local town clerk and the Department of Public Service within 30 days of construction completion. See Chapter 8.

Vertical Fenestration Windows (fixed or move- able), opaque doors, glazed doors, glazed block and combination opaque/glazed doors composed of glass or other transparent or translucent glazing materials and installed at a slope of a least 60 degrees (1.05 rad) from horizontal.

Visible Transmittance (VT) The ratio of visible light entering the space through the fenestration product assembly to the incident visible light, Visible Transmittance, includes the effects of glazing material and frame and is expressed as a number between 0 and 1.

Water Heater If a water heater is used as the primary means of heating a house, one of the Professional Services methods must be used to document compliance with the Code.

Wood Stove If a wood stove is used as the primary means of heating a house, the Home Energy Rating compliance method (see Chapter 6) must be used to document compliance with the Code.

Whole House Mechanical Ventilation System An exhaust system, supply system, or combination thereof that is designed to mechanically exchange indoor air with outdoor air when operating continuously or through a programmed intermittent schedule to satisfy the whole house ventilation rates.

Zone A space or group of spaces within a building with heating or cooling requirements that are sufficiently similar so that desired conditions can be maintained throughout using a single controlling device.

DRAFT

Appendix B

Default Values

The tables in this appendix can be used to determine thermal and efficiency values for building components when those values are not labeled or when they are unknown. Default thermal and efficiency values in this appendix include:

Component	Table to Use	Values Provided in Table
Windows, glazed doors, skylights	Table B-1	U-values
Doors	Table B-2	U-values
Integrated hot water equipment	Table B-3	Energy Factor

DRAFT

Table B-1

U-Values for Windows & Skylights*

FRAME TYPE	SINGLE PANE	DOUBLE PANE	SKYLIGHT	
			Single	Double
Metal	1.20	0.80	2.00	1.30
Metal with Thermal Break	1.10	0.65	1.90	1.10
Nonmetal or Metal Clad	0.95	0.55	1.75	1.05
Glazed Block	0.60			

Table B-2

U-Values for Doors*

DOOR TYPE	U-FACTOR
Uninsulated Metal	1.20
Insulated Metal	0.60
Wood	0.50
Insulated, nonmetal edge, max 45% glazing, any glazing double pane	0.35

* The U-values in these tables can be used in the absence of tested U-values. The product cannot receive credit for a feature that cannot be clearly detected. Where a composite of materials from two different product types is used, the product must be assigned the higher U-value.

Raised Truss/Rafter

In order to take full credit for ceiling flat insulation, there must be a consistent R-value across the entire ceiling, including the top plates of all exterior walls, using a configuration similar to one of the examples in Figure B-1.

Figure B-1: Raised Truss Examples

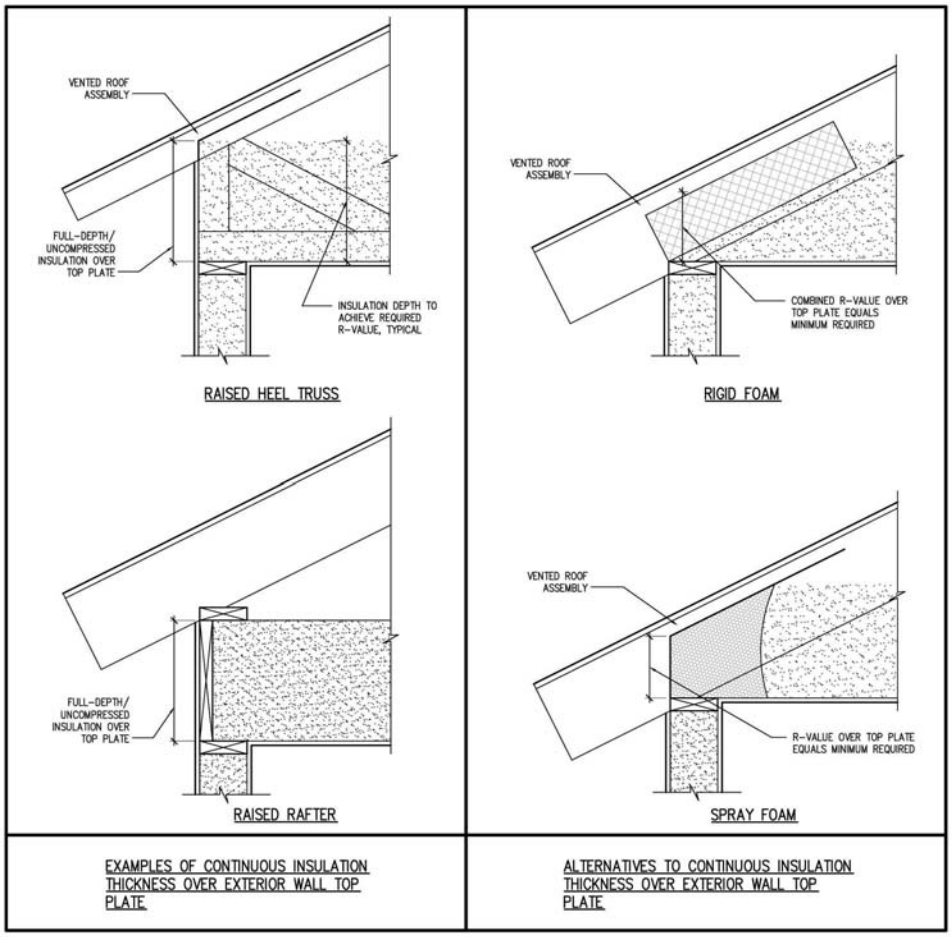

This chapter explains how to calculate:
- ★ Glazing percentages.
- ★ Average R-values.
- ★ Average U-values.

Appendix C

Guidelines for Calculations

Some calculations must be performed in order to determine technical compliance with the Vermont Residential Energy Code. In order to use the Prescriptive method, you may need to calculate average R-values or U-values for one or more building components.

DRAFT

Section C.1

When to Perform Calculations

There are three times the required calculations should be performed:

1. **At the Planning Stage:** During the design stage, take building dimensions and insulation characteristics from the building plans, specifications and drawings. (You will use these values to determine whether the building meets the Prescriptive Requirements for the compliance method you select.)
2. **In the Event of Design Changes:** If there are any changes to the energy-related components of a project, you will need to determine whether the building still meets the technical requirement of the Code.
3. **After Completion:** Upon completion of construction, determine whether the as-built home differs from the original design. If building dimensions, window thermal properties, R-values, or U-values change, you will need to review your calculations in order to determine whether the building meets the Prescriptive Requirements.

Section C.2

How to Define the Building Envelope

The thermal requirements of the Code pertain to all surfaces of the building envelope, so it is important to understand the definition and extent of the building envelope in a house.

The building envelope includes all components of a building that enclose conditioned spaces. Building envelope components separate conditioned spaces from unconditioned spaces or from outside air. For example, walls and doors between an unheated garage and a living area are part of the building envelope; walls separating an unheated garage from the outside are not.

Conditioned Space: An area or room within a building that meets one or more of the following criteria: (a) is provided with positive heating and/or cooling supply; (b) contains uninsulated ducts, pipes, or other systems designed to distribute heating and/or cooling; (c) is separated from any area or room that meets either (a) or (b) by an uninsulated wall, ceiling, or floor, or an opening.

Although floors of conditioned basements and conditioned crawl spaces are technically part of the building envelope, the Residential Energy Code does not specify insulation requirements for these components. Thus, except for the walkout portion of a conditioned basement (which is treated as a "slab on grade" and needs perimeter insulation), you can ignore these components when determining the building envelope. See Appendix A, "Definitions," for more information.

Section C.3

How to Calculate the Glazing Percentage

The glazing percentage expresses how much of the exterior wall area of the building envelope is taken up by windows. The procedure is as follows:

1. Sum the total Gross Wall Area in square feet, using exterior dimensions.

INCLUDE in the Gross Wall Area:

★ All above-grade wall square footage, including windows, sliding and patio doors, glass block and door areas.

★ Band joist areas enclosing *conditioned* space.

★ All knee-wall areas enclosing *conditioned* space.

★ Basement wall areas enclosing *conditioned* space in which more than 50% of the wall is above grade; include entire basement wall area including windows, doors and below grade portion (see example on next page).

DO NOT INCLUDE in the Gross Wall Area:

★ Band joist areas of insulated floors over *unconditioned* space or outdoors.

★ Wall, window and door areas of *conditioned* basements in which more than 50% of the wall is below grade.

★ Wall, window and door areas of *unconditioned* spaces, regardless of the portion above or below grade (such as unconditioned basements and garages).

★ Skylights.

2. Sum the Glazing Area in square feet.

Use the rough opening dimensions for flat windows and doors. For bay or bow windows, use the actual surface area of the glass and frame.

INCLUDE in the Glazing Area:

★ All windows, sliding and patio doors, glass block and skylights.

★ Basement window areas in conditioned basements, regardless of the portion above or below grade.

DO NOT INCLUDE in the Glazing Area:

★ Window areas in unconditioned spaces (such as unconditioned basements and garages).

3. Calculate the Glazing Percentage.

Divide the Glazing Area by the Gross Wall Area and multiply the result by 100.

(Glazing Area / Gross Wall Area) x 100 = Glazing %

DRAFT

Using the Glazing Percentage Rules

Ace Jones is building a two-story colonial house with a conditioned basement for a customer. Prior to construction, he reviews the plans to be sure that what he is proposing will meet the Residential Energy Code. Since he plans to use the Prescriptive method, he must calculate the Glazing Percentage.

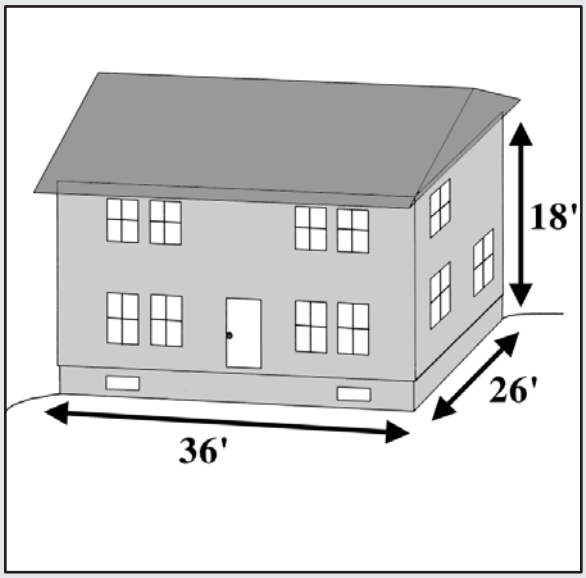

Walls: 124' perimeter lineal feet (26' + 26' + 36' + 36')
x 18' high (two 8' walls plus 2 band joists)
2,232 sq. ft.

Windows: 16 windows @ 15 sq. ft. = 240 sq. ft.
+ 4 basement windows @ 4.5 sq. ft. = 18 sq. ft.
258 sq. ft.

Example A: House with a Standard Basement

For the house over a standard basement with each wall mostly below grade, Ace calculates the Glazing Percentage as follows:

1. Gross Wall Area.....2,232 sq. ft.
2. Glazing Area .....258 sq. ft.
3. Glazing Percentage.....(258 / 2,232) x 100 = 11.6%

Example B: House with a Walkout Basement

The customers re-site their house to a more sloped area, giving them a walkout basement. With this new siting, one basement wall is now fully above grade, while the other three remain more than 50% below grade. The customers also want to add 60 square feet of windows to the walkout basement wall. Ace re-calculates the glazing percentage to determines whether this new design will comply with the Residential Energy Code:

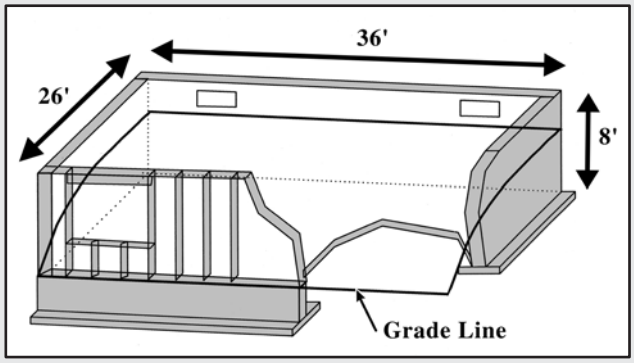

1. Gross Wall Area: 2,232 + 288 = 2,520 sq. ft.
   Each basement wall must be considered individually. Since only one 36' wall is more than 50% above grade, it is now included in the Gross Wall Area; 36' x 8' high = 288 sq. ft.
2. Glazing Area: 258 + 60 = 318 sq. ft.
3. Glazing Percentage: (318 / 2,520) x 100 = 12.6%

Section C.4

Understanding Thermal Values

In order to meet the technical requirements of the Residential Energy Code, you need to determine the thermal value of various building components. The thermal performance of all components except windows and doors is expressed in terms of *R-value*; for windows and doors, performance is expressed in terms of *U-value*.

Section C.4a

R-value

R-values are specified in the Residential Energy Code for all building components except windows and doors. The higher a component's R-value, the better insulation (i.e., resistance to heat flow) it provides.

Use the nominal R-values as listed by the manufacturer on the packaging of the insulation for determining compliance with the Code. (For loose-fill insulation, the R-value per inch of thickness for a given area of coverage is listed on the bag.)

Section C.4b

U-value

Windows and doors are labeled in U-values. A U-value is the measure of how well a component *conducts* heat. A smaller U-value results in lower heat flow, and therefore less heat loss. Higher U-values mean greater heat loss. The U-value is the reciprocal of the R-value, which is the *resistance* to heat flow (*U-value = 1/R-value).*

To determine the U-values for glazing and doors in your building project, refer to the tables in Appendix B or use the values supplied by the manufacturer, *provided* the label states that the U-value has been tested and documented in accordance with the National Fenestration Rating Council (NFRC) test procedures. *Do not use center-of-glass or center-of-door U-values.*

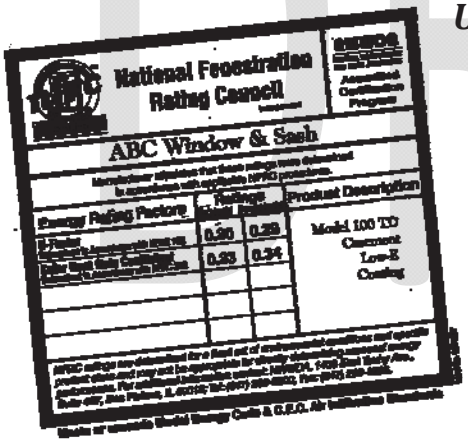

▲ Example of a manufacturer's NFRC label showing the window U-value (called the "U-Factor" here).

Section C.5

How to Calculate Average R-values and U-values

Section C.5a

Average R-values

If a home has two different types of thermal values for a single component (such as an R-38 and an R-49 flat ceiling) and you want to use the Prescriptive method, you must average the two thermal values in order to arrive at one component value. This single R-value is then compared to the required R-value in the appropriate table.

Use the following procedure to determine the average R-value for a building component with two or more thermal values:

1. Note the description and R-value of each of the parts.
2. Divide 1 by this R-value; the resulting figure becomes the U-value. (U-value = 1/R)
3. Determine the area of this portion of the building component in square feet.
4. Multiply the U-value by the area; the product is the "UA" for this part.
5. Repeat steps 1-4 for each additional part.
6. Add up the total UAs (#4) and the areas (#3).
7. Divide the total area by the total UA; **this is the average R-value.**

Example: Determining the Average Attic R-value'

Let's say part of your attic is R-38 and the other part is R-60. The total attic area is 1,000 square feet. The average R-value is calculated at 49.9.

Description	R-value	U-value (1/R-value)	Area	U-value x Area "UA"
Attic1	38	0.026	350	9.2
Attic2	60	0.017	650	10.8
			Total Area = 1000	Total UA = 20.0
			Area / UA = Average I -value 1000 / 20.0 = **49.9**	

Area/UA = R-value

Section C.5b

Average U-values

For windows and doors — which use U-values rather than R-values — the calculation is the same, except there is no need to convert R-values to U-values and back again. The procedure is as follows:

1. Note the description and U-value of each of the parts.
2. Determine the area of this portion of the building component in square feet.
3. Multiply the U-value by the area; this becomes the UA for that part.
4. Repeat steps 1-3 for each additional part.
5. Add up the total UAs (#3) and the areas (#2).
6. Divide the total UA by the total area; **this is the average U-value.**

Example: Determining the Average Window U-value

Let's say that you have 16 low-E windows (U-value 0.30), and a low-E/argon gas patio door (U-value 0.32). The average U-value is calculated to be 0.30.

Description	R-value	U-value (1/R-value)	Area	U-value x Area "UA"
Windows		0.30	240	72.0
Patio Door		0.32	40	12.8
			Total Area = 280	Total UA = 84.8
			UA / Area = Average U-value 84.8 / 280 = **0.30**	

UA/Area = U-value

DRAFT

Appendix D

Vermont Resources for Energy Efficiency & Utility Services

DRAFT

Energy Code Assistance Center

For questions, information, software and other Code-related materials, call the Energy Code Hotline toll-free at 855-887-0673.

The Energy Code Assistance Center offers workshops on the Code throughout Vermont to teach builders what the Code involves and how to comply. The schedule is available by calling the Energy Code Hotline.

Residential Energy Code Web Site

For more detail and background on the Vermont Residential Buildings Energy Code, check the web site maintained by the Public Service Department at http://www.state.vt.us/psd.

Burlington Electric Department:

The Burlington Electric Department (BED) is Vermont's largest municipally owned electric utility serving more than 19,600 customers. BED is the exclusive provider of electric service to the City of Burlington. BED works with Vermont Gas Systems and Efficiency Vermont to offer customers the Vermont ENERGY STAR® Homes new construction and renovation service in Burlington. This service is designed to help the builder, developer and building owner exceed the required Burlington Guidelines for Energy-Efficient Construction (based on RBES) and take advantage of the highest-efficiency electrical equipment available. By participating in this program, customers enjoy energy savings and lower operating expenses, while the community benefits from a clean, low-cost power supply. Information: 802-865-7337 or www.burlingtonelectric.com.

Building Performance Professionals Association

BPPA supports and represents its members as we work to promote Vermont's building performance industry and to ensure the energy efficiency, comfort and safety of our residential and commercial buildings. www.bpps-vt.org

Building for Social Responsibility

BSR is a small group of Vermont builders and allied professionals concerned with the environmental, economic, and health effects of home construction. Members meet monthly and sponsor occasional educational events. Visit www.bsr-vt.org for more information.

Efficiency Vermont

Efficiency Vermont is the nation's first statewide provider of energy-efficiency services. Efficiency Vermont is operated by an independent, nonprofit organization under contract to the Vermont Public Service Board. Efficiency Vermont provides technical advice, financial assistance and design guidance to help make Vermont homes, farms and businesses energy efficient. Information: 888-921-5990 or efficiencyvermont.com.

DRAFT

Home Builders & Remodelers Associations

These trade organizations are actively involved in building issues and other activities in support of the building industry. There are two chapters of the National Association of Home Builders (Washington, DC; 800-368-5242) located in Vermont:

- Home Builders and Remodelers Association of Southern Vermont: www.cvthomebuilders.com.
- Home Builders & Remodelers Association of Northern Vermont: www.homebuildersvt.com.

Vermont Public Service Department

The Vermont Public Service Department (DPS), Planning & Energy Resources Division, is responsible for the administration of the Residential Energy Code. For questions regarding Code interpretation, rules and enforcement, contact DPS at 802-828-2811.

Vermont Energy Investment Corporation

VEIC is a nonprofit organization that issues home energy ratings for new and existing homes. The ratings can be used for marketing purposes or to qualify for special mortgage programs. Home energy ratings also can be used to show compliance with the Residential Energy Code. Contact VEIC at 800-639-6069.

Vermont ENERGY STAR® *Homes Service*

Efficiency Vermont and Vermont Gas Systems sponsor this voluntary residential new construction energy-efficiency service throughout the state. Cash incentives and rebates are available for integrating energy-efficient building design with high efficiency lighting and appliances. Residential Energy Code support, builder and home owner/buyer training and advice, and home energy rating services are available. Services and incentives also are available for multi-family low-income housing and market-rate housing. Information: 800-893-1997.

Vermont Gas Systems

Vermont Gas Systems supplies natural gas service to northwestern Vermont and has provided energy-efficiency programs since 1992. If you're building a new home, trying to save energy in an existing home, or installing a new furnace, boiler or hot water heater, Vermont Gas has efficiency experts on staff and energy-efficiency programs to help you make the best decisions for your specific situation. Vermont Gas Systems partners with Efficiency Vermont to offer customers the Vermont ENERGY STAR® Homes new construction and renovation service. Information: 802-863-4511 or www.vermontgas.com.

Appendix E

Residential Building Energy Standards Legislation

The Vermont Residential Energy Code (officially "Residential Building Energy Standards" or "RBES"), is Vermont's statewide residential energy code. Created by a task force assembled by Governor Howard Dean in the fall of 1995, the Residential Energy Code was enacted by the Vermont Legislature (Act 20) in May 1997 with the support of many groups and organizations, including home builders associations, utilities, environmental groups, housing and energy professionals, and state agencies. The initial Residential Energy Code took effect July 1, 1997.

The RBES Statute, Act 20, called for the code to be updated every three years beginning in 1999. The Public Service Department (DPS) is required by the statute to form an advisory committee of stakeholders similar to the original Task Force to provide the Commissioner of Labor and Industry with recommendations prior to that agency conducting a formal rule-making process to update the standards.

The Fourth Edition of the Vermont Residential Building Energy Standard (RBES), as based on the International Energy Conservation Code® 2015 edition, is designed to promote the optimal utilization of energy and non-depletable resources in all communities, large and small. This comprehensive energy conservation code establishes minimum regulations for energy-efficient buildings using prescriptive and performance-related provisions. RBES is founded on broad-based principles that make possible the use of new materials and energy-efficient designs.

DRAFT

For More Information

For additional information about the legislation, contact the Vermont Public Service Department (DPS) at 802-828-2811. For a copy of the complete legislation and more detail on the Code, visit the DPS web site at www.state.vt.us/psd.

Table5-1

Prescriptive Requirements

Base Code ~ *Single-Family and Multi-Family Homes*

Component	*Package 1*	*Package 2*	*Package 3*	*Package 4*	*Package 5*
1. Ceiling R-Value	R-49	R-49	**R-28 cont.**	**R-60 attic/ R-49 slope**	**R-49**
2. Above-Grade Wall R-value	R-13+10	**R-25**	**R-21 cont.**	**R-20 cav.**	**R-13+10**
3. Floor R-value	R-30	R-30	R-30	R-30	R-30
4. Basement/Crawl Space Wall R-value	R-15/20	R-15/20	R-15/20	R-15/20	R-15/20
5. Slab Edge R-value	R-15, 4ft.	R-15, 4ft.	R-15, 4ft	R-15, 4 ft	**R-10, 4 ft**
6. Heated Slab R-value (Edge and Under)	R-15	R-15	R-15	R-15	R-15
7. Window and Door U-value	0.32	**0.28**	0.32	**0.28**	**0.28**
8. Skylight U-value	0.55	0.55	0.55	0.55	0.55
9. Maximum Air Leakage	Complete Air Sealing Checklist				
10. Maximum Duct Leakage	4 CFM25/ 100 CFA	4 CFM25/ 100 CFA	4 CFM25/ 100 CFA	4 CFM25/ 100 CFA	4 CFM25/ 100 CFA

Note: R-values must be *equal to or greater* than the values shown. U-values must be *equal to or less* than the values shown.

Table Qualifiers

A **Therrmal Values:** Use the nominal thermal values listed by the manufacturer. If the home's design specifies a component that has two different thermal values (i.e., R-38 ceiling and R-49 ceiling), an average R-value must be calculated for comparison. (See Section 3.5a.)

B **Wall R-Values:** "13+10" means R-13 cavity insulation plus R-10 insulated sheathing. R-25 can be met through any combination of cavity and continuous insulation. If structural sheathing covers 40% or less of the exterior, the continuous insulation R-value can be reduced by up to R-3 to maintain a consistent total sheathing thickness on areas of the walls covered by structural sheathing. If structural sheathing covers more than 40% of exterior, structural sheathing shall be supplemented with insulated sheathing of at least R-2.

C **Window U-Values:** Window U-value is the average U-value for all glazing, including windows, and sliding and patio doors. Replacement windows must have an average U-value of 0.32. (See Section 3.5b to calculate average U-values.)

D **Window and Door Exemptions:** You can exclude up to 15 square feet of glazed fenestration area from the calculation of average U-value for windows, and one door (up to 24 square feet) from the calculation of average U-value for doors.

E **Default Thermal Values:** See Appendix B. Flat and sloped ceiling R-values assume standard truss. However, if a raised truss is used, the requirement for R-49 may be reduced to R-38 and the requirement for R-60 may be reduced to R-49. See Figure B-1 (Appendix B).

F **Ceilings Without Attics:** For ceilings without attic spaces (vaulted ceilings), R-30 is allowed for up to 500 square feet or 20% of the total insulated ceiling area, whichever is less.

G **Ceilings With Attics:** For ceilings with attic spaces, R-38 is allowed to satisfy the requirement for R-49 wherever the full height of uncompressed R-38 insulation extends over the wall top plate at the eaves.

H **Slab Edge Insulation:** Thermal values in this table require the following configurations: slab edge insulation must extend 4 feet or a combination of depth and width that equals 4 feet. Exemption: Up to 8 lineal feet of exposed slab edge may be insulated to R-10.

I **Basement/Crawl Space R-Values:** "15/20" means R-15 continuous insulated sheathing on the interior or exterior of the home or R-20 cavity insulation at the interior of the basement wall. "15/20" is allowed to be met with R-13 cavity insulation on the interior of the basement wall plus R-5 continuous insulated sheathing on the interior or exterior of the home. Crawl space wall insulation must cover the full height of the wall and extend to a depth 12 inches below grade and basement wall insulation must cover the full height of the basement wall.

J **Hatches:** Access hatches and doors must be insulated to the same level as the surrounding surface. Vertical doors that provide access to attic spaces must meet the window and door requirements from Table 5-1.

K **Unconditioned Spaces:** Components that enclose unconditioned spaces do not need to be considered.

L **Heated Slabs:** In addition to R-15 slab edge insulation, R-15 insulation is required beneath the entire slab for radiant or directly heated slabs.

M **Thermal Values That Do Not Apply:** Ignore the values in the table if the building component is not part of the home.

N **Sunrooms:** All sunrooms must meet the basic requirements and the Prescriptive requirements outlined above. For sunrooms with *thermal isolation*, the minimum ceiling insulation R-values must be R-30; the minimum wall R-value must be R-13; and the maximum fenestration U-factor must be 0.45.

O **Eave Baffle:** Eave baffles must be installed over soffit and eave vents where air-permeable insulation is used in vented attics.

P **Unvented Attics:** Unvented attics must meet the requirements of Section C.1d

Q **Floors:** Floors must be insulated to R-30 or to a level sufficient to fill the framing cavity.