VTA0712-J06-001
ELECTRICAL POWER SCHEMATIC

LABELS:

#	NOTE REFERENCE
#	REV REFERENCE
06 A2	REFERENCE (SHEET, COORDINATE)
(H06.03.A2)	REFERENCE (DRAWING,SHEET, COORDINATE)

LINETYPES:

- WIRE
- BUS
- ENCLOSURE OR BOUNDARY

WIRE NUMBERING

A### ALPHA=CONDUCTOR TYPE ###=NUMBER

W=SINGLE CORE CONDUCTOR

P=MULTI-CONDUCTOR POWER CABLE

C=MULTI-CONDUCTOR CONTROL CABLE

D=MULTI-CONDUCTOR DATA/SERIAL CABLE

DRAWING REFERENCES:

J01 SINGLE LINE DIAGRAM

J06 2-LINE ELECTRICAL POWER WIRING DIAGRAM

H06 2-LINE ELECTRICAL CONTROL WIRING DIAGRAM

R0X-00X GENERATOR ELECTRICAL WIRING DIAGRAM

R0X-00X RECTIFIER ELECTRICAL WIRING DIAGRAM

COLORS:

BK - BLACK	GY - GREY	VT - VIOLET
BN - BROWN	OG - ORANGE	WH - WHITE
BU - BLUE	PK - PINK	YL - YELLOW
GN - GREEN	RD - RED	

Reference	Designators
AI	Analog Input
AO	Analog Output
BT	Battery
CAP	Capacitor
CB	Circuit Breaker
CO	Carbon Monoxide Detector
COM	Communication Module
CR	Control Relay
CT	Current Transducer
CTR	Controller
DCT	Disconnect Switch
DDC	DC/DC Converter
DI	Digital Input
DIO	Diode
DMP	Damper/Louver
DO	Digital Output
DS	Light
ENCL	Enclosure
F	Fuse
FAN	Fan
G	Generator
HMI	Human Machine Interface
HTR	Heater
HVAC	Air Conditioner
INV	Inverter
J	Power Outlet
JB	Junction Box
K	Contactor
LT	Level Transmitter
MPPT	Maximum Power Point Trac
MTS	Manual Transfer Switch
PDB	Power Distribution Bus
PM	Power Meter
PT	Pressure Transducer
PV	Photovoltaic Module
REC	Rectifier
RTU	Remote Telemetry Unit
SA	Surge Arrestor
SD	Smoke Detector
SHNT	Current Shunt
SW	Switch
T	Transformer
TB	Terminal Block
TT	Temperature Transmitter
VFD	Variable Frequency Drive
VT	Voltage Transducer

SYMBOL KEY:

BATTERY
DIODE
EARTH
CHASSIS
RESISTOR
TERMINAL BLOCK
N.O. CONTACT
N.C. CONTACT
1P CB
2P CB
FUSE
TIMER SWITCH
RELAY COIL
CABLE SCREEN W/ TIED BACK END
INVERTER
RECTIFIER/ POWER SUPPLY
DC/DC CONVERTER
AC MOTOR
GENSET
GENERIC DC LOAD
EARTH
CHASSIS/CABINET
N.O. PUSHBUTTON
N.C. PUSHBUTTON
E-STOP
N.C. SWITCH
RTD
TIMER SWITCH
RESISTIVE HEATER
PHOTOVOLTAIC MODULE

REV	REVISIONS	DATE	ENG	CHK	APR
A	AS INSTALLED	18DEC14	DMH		
	RELEASED STATE				

Northern Reliability
340 Mad River Park
Waitsfield, VT 05673 USA
www.northernreliability.com

The information contained herein is proprietary to Northern Reliability, Inc. and constitutes "Confidential Information" pursuant to an agreement between Northern Reliability, Inc. and the recipient. This information is provided to facilitate bidding, construction, fabrication and/or execution of requirements stated and is to be surrendered upon request or completion of services. It may not be reproduced or transferred to other documents or discussed with others without written permission by Northern Reliability, Inc.

INTERPRET GEOMETRIC TOLERANCES PER ANSI Y14.5. UNLESS OTHERWISE SPECIFIED DIMENSIONS ARE IN MILLIMETERS. TOLERANCES: ANGLES:±1/2° X=±2 .X=±.5 .XX=±.125

MATERIAL: N/A
FINISH: N/A

SPS
ELECTRICAL POWER SCHEMATIC
SPS24 TYPE 2 w/ SC100 v.4
COVER SHEET

DRAWN BY: DMH
SIZE: 11x8.5
VTA0712-J06-001
REV. A
SCALE: N/A
CAGE CODE: 5C2A1
SHEET 01 OF 07

SHEET INDEX:

SCHEMATIC OVERVIEW

01. COVER SHEET
02. INDEX
03. DC BUS
04. PLC & SYSTEM CONTROLS
05. SYSTEM I/O
06. ENVIRONMENTALS
07. CUSTOMER LOAD OPTIONS
08. GENERATOR POWER (GENERATOR SYSTEMS ONLY)
09. GENERATOR CONTROLS (GENERATOR SYSTEMS ONLY)

DRAWING NOTES:

1. SERIES WIRING OF CONTACTS REPRESENTED AS A SINGLE CONTACT
2.

GENERAL NOTES:

1. THIS DRAWING IS ASSOCIATED WITH SC100 CONTROLLER VERSION 3 AND PLC CODE REVISION SC100_H19_003_REV_x1.RSS AND LATER.
2. GENERAL NOTES ARE FORMATTED WITHOUT REFERENCE SYMBOL BLOCK. GENERAL NOTES PERTAIN TO ALL OBJECTS ON ALL SHEETS OF THIS DRAWING.
3. ALL SYMBOLS AND TEXT IN THIS DRAWING ARE LAID DOWN WITH 0.1" SNAP ON. NEW SYMBOLS SHOULD BE CREATED WITH CONNECTING POINTS ATTACHED ON THIS SNAP GRID. WHEN COPYING FROM OTHER DRAWINGS, USE "COPY WITH BASE POINT" COMMAND TO MAINTAIN ALIGNMENT TO GRID. TO SET GRID AND SNAP, USE "SET PARAMETERS" COMMAND IN DROPDOWN MENUS.

SYSTEM TYPE:

INPUTS I/1, I/2 & I/3 RESERVED FOR HARDWIRE SYSTEM IDENTIFICATION

TYPE	BAT	I/3	I/2	I/1
1	600	0	0	1
2	1200	0	1	0
3	1800	0	1	1
4		1	0	0
5		1	0	1
6		1	1	0
7	300	1	1	1
8	1000	0	0	0

INPUTS 3/1, 3/2 & 3/3 RESERVED FOR GENERATOR IDENTIFICATION

kW	Fuel	3/3	3/2	3/1
2.5	Prop	0	0	1
6.5	Prop	0	1	0
10	Prop	0	1	1
3	Diesel	1	0	0
6	Diesel	1	0	1
7.5	Diesel	1	1	0
10	Diesel	1	1	1
None		0	0	0

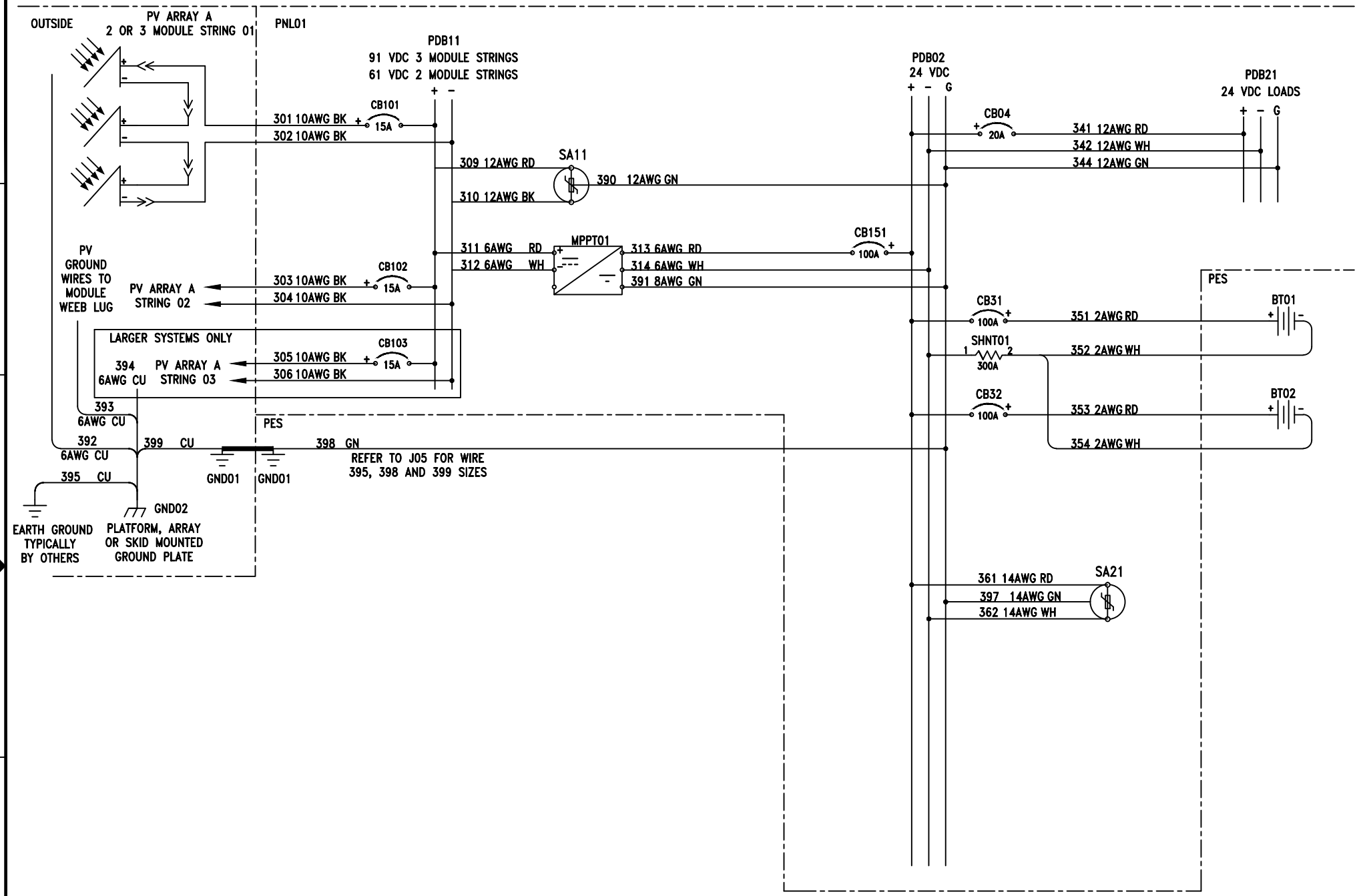

REV	DESCRIPTION	DATE	ENG	CHK	APR
	SEE SHEET 1.	18DEC14			

REVISIONS

Northern Reliability

340 Mad River Park
Waitsfield, VT 05673 USA
www.northernreliability.com

PROPRIETARY: SEE SHT 1

WIRING SCHEMATIC DIAGRAM
SPS
DC BUS

SIZE: 11" x 8.5"
SCALE: N/A

SPS36-J06-004

REV. x8

SHEET 03 OF 07

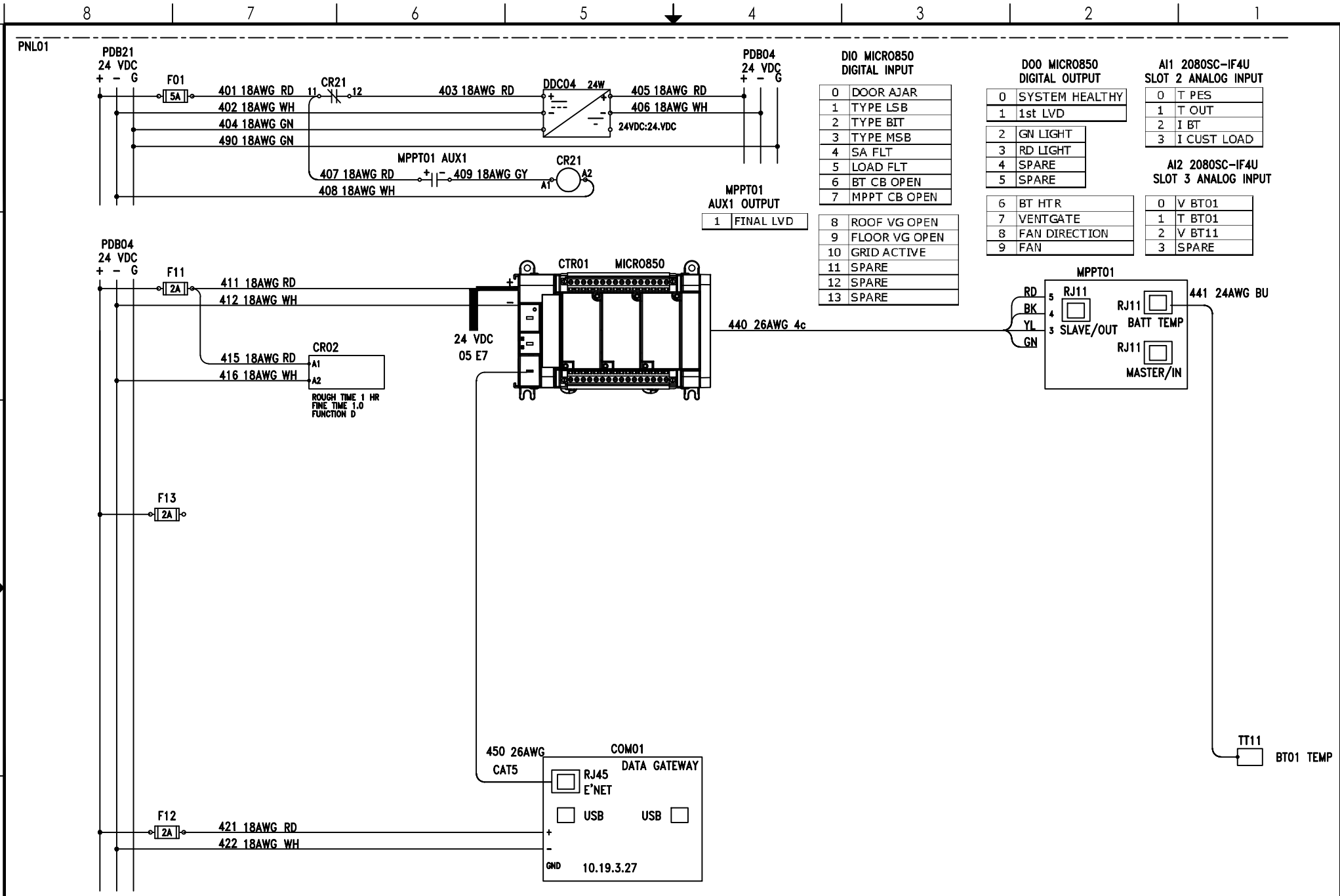

DI0 MICRO850 DIGITAL INPUT

0	DOOR AJAR
1	TYPE LSB
2	TYPE BIT
3	TYPE MSB
4	SA FLT
5	LOAD FLT
6	BT CB OPEN
7	MPPT CB OPEN
8	ROOF VG OPEN
9	FLOOR VG OPEN
10	GRID ACTIVE
11	SPARE
12	SPARE
13	SPARE

MPPT01 AUX1 OUTPUT

1	FINAL LVD

DO0 MICRO850 DIGITAL OUTPUT

0	SYSTEM HEALTHY
1	1st LVD
2	GN LIGHT
3	RD LIGHT
4	SPARE
5	SPARE
6	BT HTR
7	VENTGATE
8	FAN DIRECTION
9	FAN

AI1 2080SC-IF4U SLOT 2 ANALOG INPUT

0	T PES
1	T OUT
2	I BT
3	I CUST LOAD

AI2 2080SC-IF4U SLOT 3 ANALOG INPUT

0	V BT01
1	T BT01
2	V BT11
3	SPARE

REV	DESCRIPTION	DATE	ENG	CHK	APR
	SEE SHEET 1.	18DEC14			

REVISIONS

Northern Reliability

340 Mad River Park
Waitsfield, VT 05673 USA
www.northernreliability.com
PROPRIETARY: SEE SHT 1

WIRING SCHEMATIC DIAGRAM
SPS
PLC & SYSTEM CONTROLS

SIZE: 11" x 8.5"
SCALE: N/A
SPS36-J06-004
REV. x8
SHEET 04 OF 07

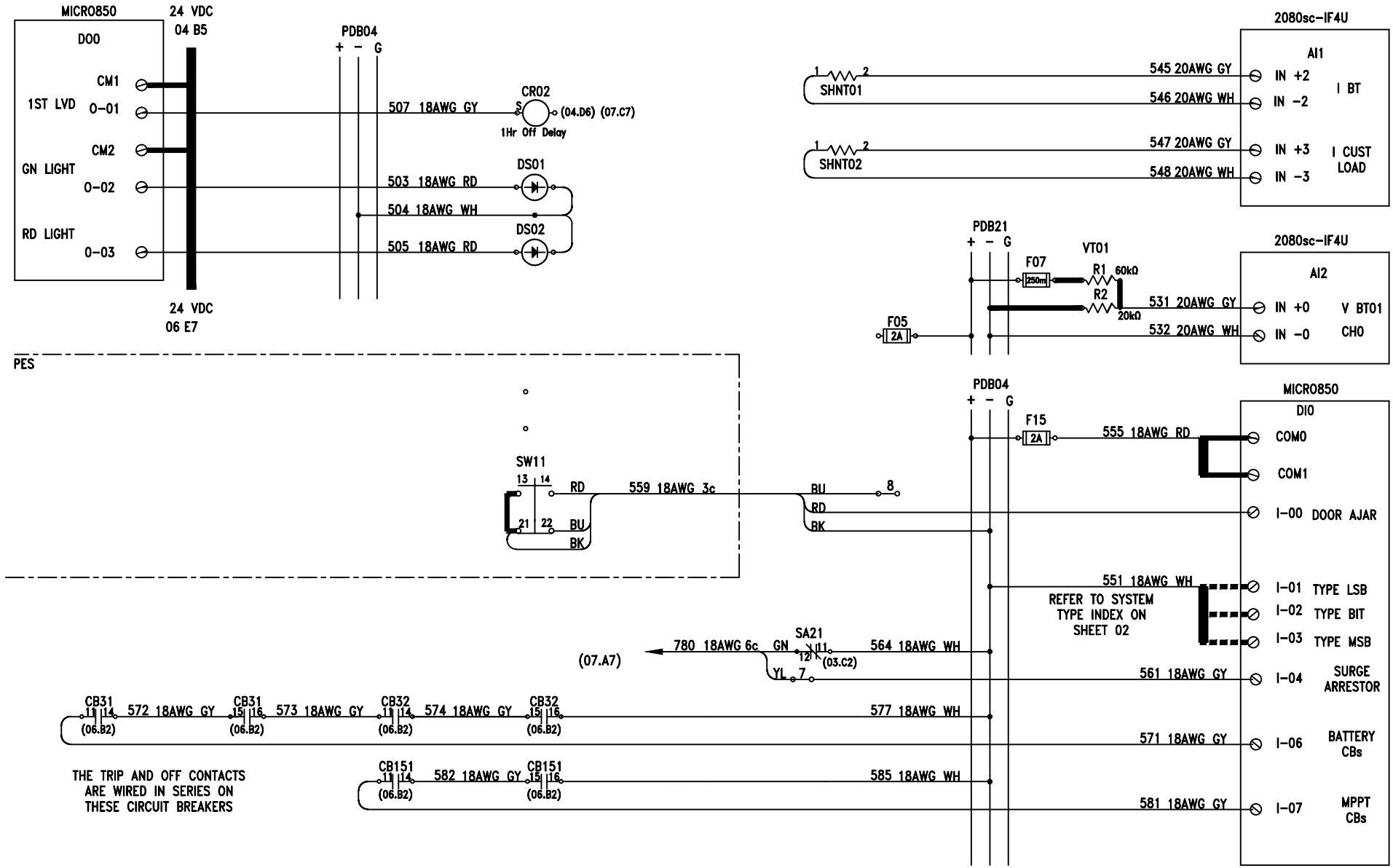

REV	DESCRIPTION	DATE	ENG	CHK	APR
	SEE SHEET 1.	18DEC14			

REVISIONS

Northern Reliability

340 Mad River Park
Waitsfield, VT 05673 USA
www.northernreliability.com
PROPRIETARY: SEE SHT 1

WIRING SCHEMATIC DIAGRAM
SPS
SYSTEM I/O

SIZE: 11" x 8.5"
SCALE: N/A
SPS36-J06-004
REV. x8
SHEET 05 OF 07

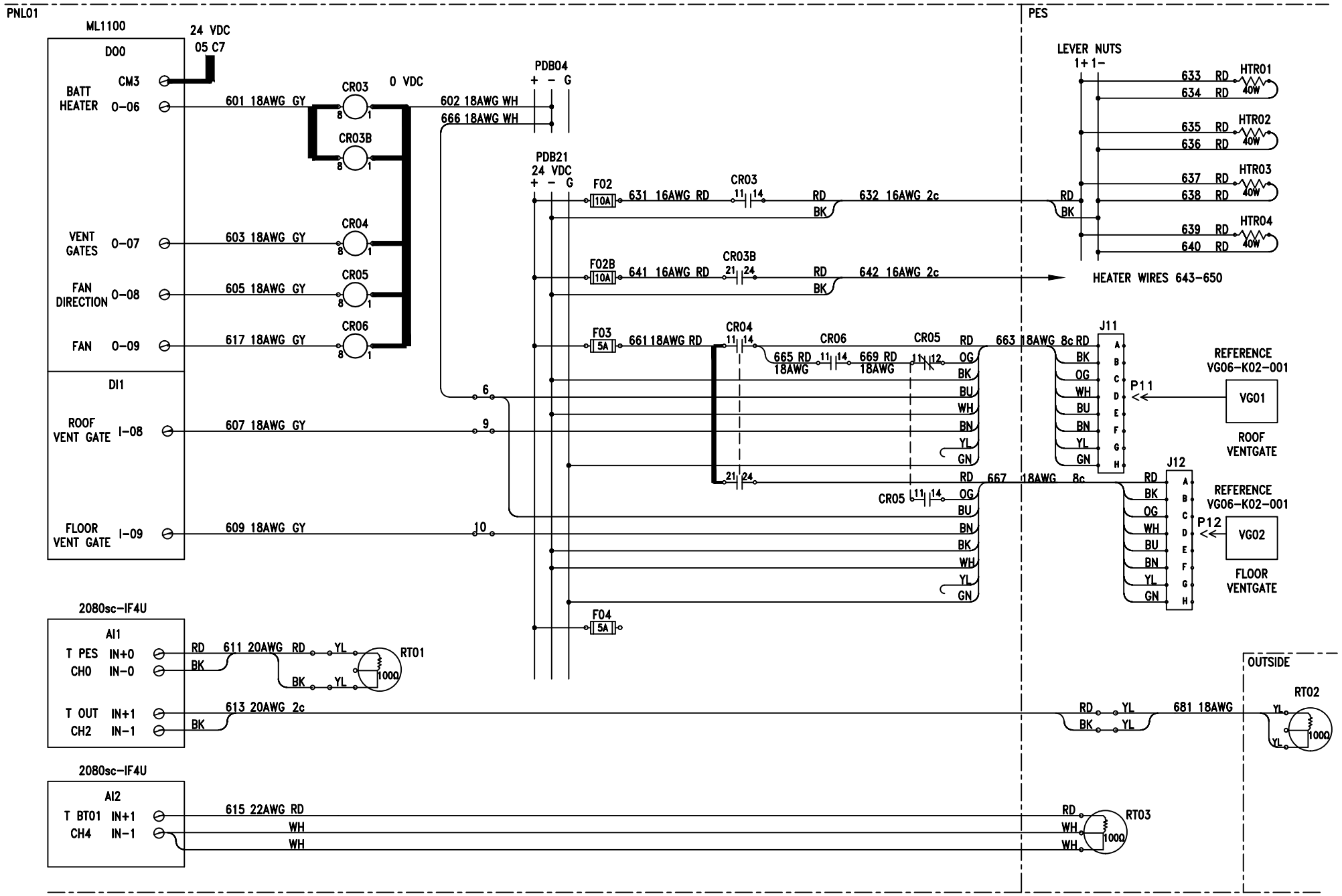

REV	DESCRIPTION	DATE	ENG	CHK	APR
	SEE SHEET 1.	02OCT14			

REVISIONS

Northern Reliability

340 Mad River Park
Waitsfield, VT 05673 USA
www.northernreliability.com
PROPRIETARY: SEE SHT 1

WIRING SCHEMATIC DIAGRAM
SPS
ENVIRONMENTALS

SIZE: 11" x 8.5" | SPS36-J06-004 | REV. x8
SCALE: N/A | SHEET 06 OF 07

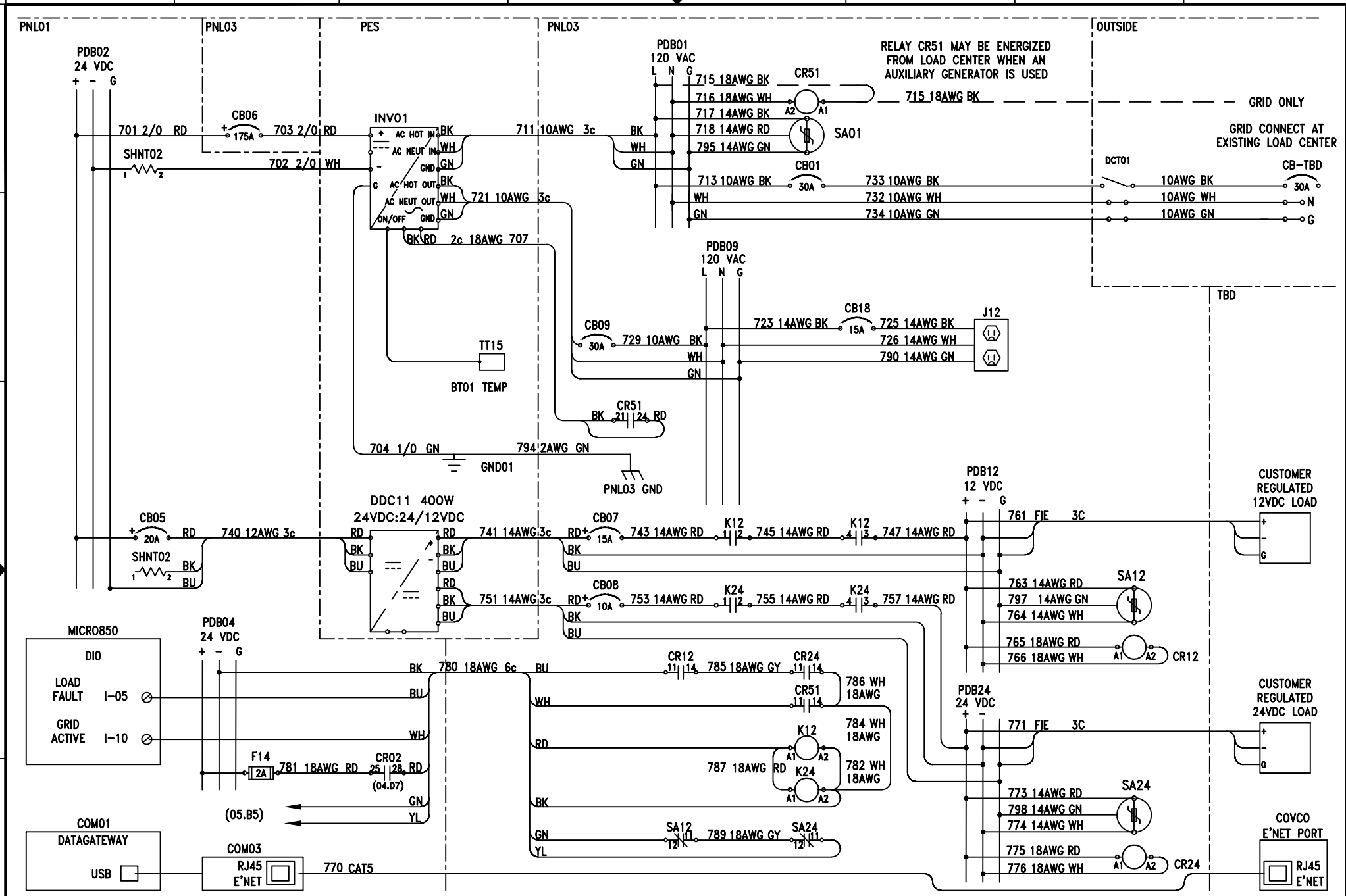

REV	DESCRIPTION	DATE	ENG	CHK	APR
	SEE SHEET 1.	02OCT14			

REVISIONS

Northern Reliability

340 Mad River Park
Waitsfield, VT 05673 USA
www.northernreliability.com
PROPRIETARY: SEE SHT 1

SPS
VTA0712
CUSTOMER GRID-INTERACTIVE OPTIONS

SIZE: 11" x 8.5"
SCALE: N/A

VTA0712-J06-001

REV. A

SHEET 07 OF 07